Z18 Series Servo Spindle Motor (1.1～400kW)

超同步股份有限公司
CTB Co., Ltd.

CTB-PI-S-2610-05-01

Z18 SERIES SERVO SPINDLE MOTOR

Z18 series servo spindle motor, which is developed, designed and produced by Z18 ,is a new type of AC spindle induction servo motor with international advanced level which is making it go international.

Z18 series servo spindle motor has a compact structure, superior function, good shape and high efficiency, widely used in various fields of machinery manufacturing with very good cost performance.

The design and production of Z18 series servo spindle meet is accord with relevant standards, such as ISO, IEC, GB, etc.

The latest patent design

- ◆ Good shape
- ◆ High efficiency
- ◆ Compact structure
- ◆ Enclosed cooling air duct
- ◆ Low noise
- ◆ Optimal energy-saving design

Industry applications

- ◆ CNC lathe, turn-milling machine tool, vertical lathe, Heavy duty horizontal lathe
- ◆ CNC milling machine, vertical machine center, horizontal machine center
- ◆ CNC boring lathe, double housing planer, planer type milling machine
- ◆ CNC grinding machine, vertical grinder, floor type boring and milling machine
- ◆ Drilling and tapping center, engraving and milling machine, gear hobbing machine, gear shaping machine, gear milling machine

Standard spindle control function

- ◆ High torque cutting at low speed
- ◆ Constant power cutting with high speed
- ◆ Zero speed spindle lock
- ◆ Accurate stop control
- ◆ C-axis function
- ◆ Rigid tapping

Series specification and standard

- ◆ Power range: 1.1 - 400kw (1500rpm)
- ◆ Pole number: 4 pole
- ◆ Max speed: 15000r/m
- ◆ Encoder: Built-in(incremental encoder, rotary transformer, sin-cos encoder, absolute encoder)
- ◆ Cooling method: forced-air cooling
- ◆ Working system: continuous duty (S1)
- ◆ Installation structure type: B3/B5/B35(according to IEC60034-7standard)
- ◆ Noise: ≤70dB(A)
- ◆ Protection class:IP55(IEC60034-5)
- ◆ Insulation and voltage resistance:AC1800V
- ◆ Insulation class: F class
- ◆ Vibration class: A
- ◆ Environment temperature: -15-45°C
- ◆ Environment humidity: below 95%RH (Non-condensate)

◆ Model Explanation (For Example 7.5KW Spindle Motor)

Z18	–	4	7P5	G	B	15	–	60	H	5	G	–	A	2	0	O	–	F1
1		2	3	4	5	6		7	8	9	10		11	12	13	14		15

Model Explanation

No	ITEM	Description	Model Meaning
1	Plant Code	Z18: Motor Series Code	CTB Company Product
2	Voltage Class	2: 200V 4: 400V	400V
3	Power Code	SeeStandard Specification Table	7.5KW
4	Encoder Code	Code Encoder Type B: Without Encoder G: Incremental Encoder 1024P 2500P 8192P R: Resolver 1024P S: Sin-Cos Encoder 2048P A: Absolute Encoder 23 bit E: Single-turn Absolute Encoder: 17bit	Inbuilt Incremental Encoder
5	Motor Frame Size Code	Code Flange Size (Length x Width) mm A: 175×175 E: 320×320 B: 205×205 F: 380×380 C: 265×265 G: 480×480 D: 300×300 H: 580×580	B Frame Size
6	BasicSpeed Code	Code Speed r/min Code Speed r/min 05: 500 30: 3000 07: 750 40: 4000 10: 1000 45: 4500 15: 1500 60: 6000 20: 2000 80: 8000	Rated Speed:1500r/min
7	Constant Power Max SpeedCode		Constant Power Max Speed:6000 r/min
8	Max SpeedCode	Code Speed r/min Code Speed r/min LL: 2500 H: 8000 L: 3000 HF: 10000 M: 6000 F: 12000	Max Speed:8000 r/min
9	Mounting Type Code	3: Horizontally - Mounted 5: Flanged - Mounting 35: Horizontally - Flanged Mounting	Flanged Mounting
10	Motor Shaft Structure	G: Without Keyslot J: With Keyslot	Without Keyslot
11	Smart card	A: Smart card N: None	With smart-card
12	Terminal box incoming direction	2: Aluminum-right 3: Aluminum-left 5: Sheet metal-left	Plastic-right
13	Terminal Box type	0: Standard junction box + encoder black plug 1: Standard junction box + encoder aviation plug 2: Waterproof junction box + encoder black plug 3: Waterproof junction box + encoder aviation plug	Standard junction box + Encoder black plug
14	Sales region	E-export motors; domestic sales omit this item	Sales region
15	Un-standard	F1: Shaft extension non-standard F2: Flange non-standard F3: Foundation non-standard F4: Stator non-standard F5: Fan non-standard F7: Encoder non-standard F6: Terminal box non-standard F9: Other	Shaft extension non-standard

CTB超同步

Frame code：A1　Dimension：175×175×325 mm

◆ Electrical Parameter

Voltage Class：400V　Connection：Y　Fan Power：20W　Fan Voltage：380V　Fan Current：0.08A

Motor Model	Rated Power (KW)	Rated Current (A)	Rated Torque (N.m)	Rated Voltage (V)	Pole Number (P)	Rated Frequency (H)	Rated Speed (r/min)	Constant Power Max Speed (r/min)	Max Speed (r/min)	Rotational Inertia (KG.m2)
Z18-40P7XA10-XXXX	0.75	1.8/2.0/2.2	7.2	380/335/305	4	36.5	1000	2000/3000/4000	6000	0.0034
Z18-41P1XA15-XXXX	1.1	2.5/2.7/3.0	7.0	380/350/320	4	53.1	1500	3000/4500/6000	8000	0.0034
Z18-41P5XA20-XXXX	1.5	3.3/3.6/3.9	7.2	380/350/320	4	69.9	2000	4000/6000/8000	10000	0.0034
Z18-42P2XA30-XXXX	2.2	4.7/5.1/5.5	7.0	380/350/320	4	103.1	3000	6000/9000/12000	10000	0.0034

◆ Characteristic Curve

40P7XA10-40

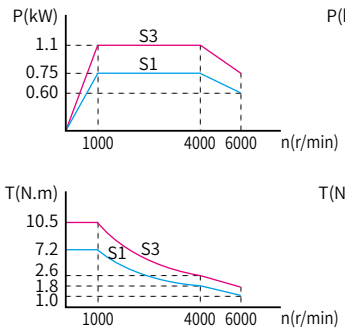

41P1XA15-60

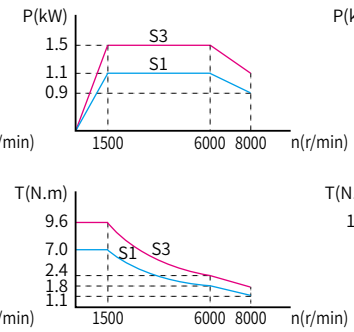

41P5XA20-80

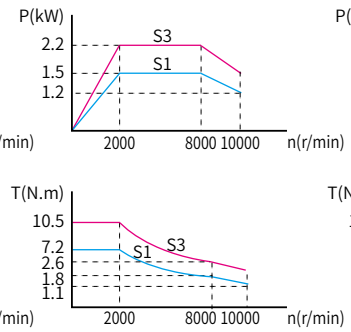

42p2XA30-A2

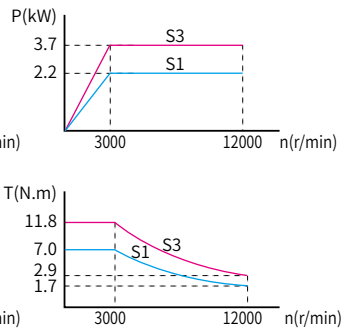

◆ Performance Index

ITEM	INDEX
Encoder (optional)	CE9-2500(Incremental)
	CE9-23B(Absolute)
	RZ12-1024(Resolver)
	SC-2048(SIN-COS)
	SC-128(SIN-COS)
	RE12-17bit(Absolute)
Shaft Type	G：Without Keyslot
	J：With Keyslot
Mounting Type	B3 B5 B35
Weight / Gross	18 (25) kg
Protection Class	IP55
Insulation Class	F Class
Rated Temperature Rise	90K
Vibration Class	A
Noise	≤70dB(A)
Environment	-15～45°C
Environment	≤95%RH

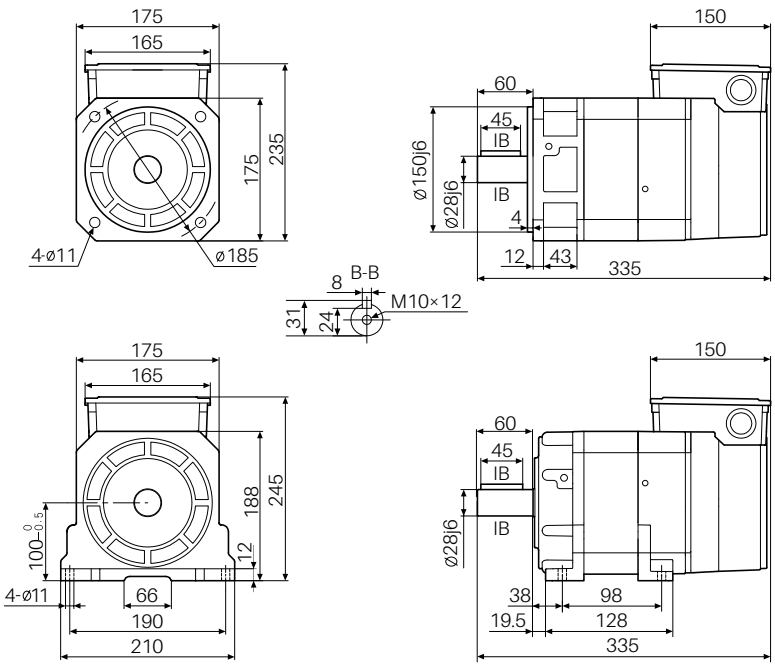

CTB超同步

Frame code：A2　Dimension：175×175×335 mm

◆ Electrical Parameter

Voltage Class：400V　Connection：Y　Fan Power：20W　Fan Voltage：380V　Fan Current：0.08A

Motor Model	Rated Power (KW)	Rated Current (A)	Rated Torque (N.m)	Rated Voltage (V)	Pole Number (P)	Rated Frequency (H)	Rated Speed (r/min)	Constant Power Max Speed (r/min)	Max Speed (r/min)	Rotational Inertia (KG.m2)
Z18-41P1XA10-XXXX	1.1	2.6/2.9/3.2	10.5	380/340/305	4	36.9	1000	2000/3000/4000	6000	0.0039
Z18-41P5XA15-XXXX	1.5	3.3/3.6/4.0	9.6	380/345/320	4	53.3	1500	3000/4500/6000	8000	0.0039
Z18-42P0XA20-XXXX	2.0	4.3/4.7/5.3	9.6	380/345/305	4	69.9	2000	4000/6000/8000	10000	0.0039
Z18-43P0XA30-XXXX	3.0	6.2/6.6/7.5	9.6	380/355/310	4	103.4	3000	6000/9000/12000	10000	0.0039

◆ Characteristic Curve

41P1XA10-40　41P5XA15-60　42P0XA20-80　43P0XA30-A2

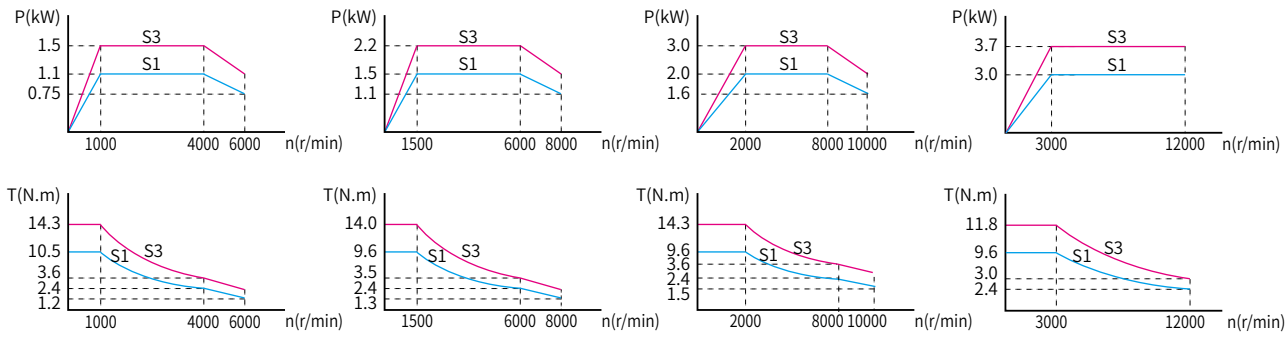

◆ Performance Index

ITEM	INDEX
Encoder (optional)	CE9-2500(Incremental)
	CE9-23B(Absolute)
	RZ12-1024(Resolver)
	SC-2048(SIN-COS)
	SC-128(SIN-COS)
	RE12-17bit(Absolute)
Shaft Type	G：Without Keyslot
	J：With Keyslot
Mounting Type	B3 B5 B35
Weight / Gross	20 (27) kg
Protection Class	IP55
Insulation Class	F Class
Rated Temperature Rise	90K
Vibration Class	A
Noise	≤70dB(A)
Environment	-15～45℃
Environment	≤95%RH

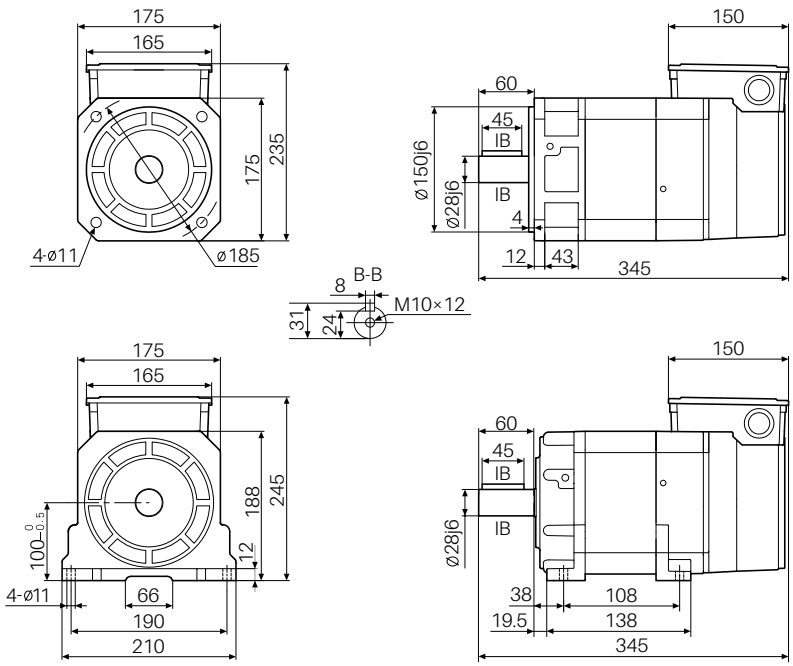

CTB超同步

Frame code：A3　Dimension：175×175×360 mm

◆ Electrical Parameter

Voltage Class：400V　Connection：Y　Fan Power：20W　Fan Voltage：380V　Fan Current：0.08A

Motor Model	Rated Power (KW)	Rated Current (A)	Rated Torque (N.m)	Rated Voltage (V)	Pole Number (P)	Rated Frequency (H)	Rated Speed (r/min)	Constant Power Max Speed (r/min)	Max Speed (r/min)	Rotational Inertia (KG.m2)
Z18-41P5XA10-XXXX	1.5	3.3/3.6/4.0	14.3	380/360/320	4	36.4	1000	2000/3000/4000	6000	0.0054
Z18-42P2XA15-XXXX	2.2	4.7/5.0/5.6	14.0	380/355/320	4	53.0	1500	3000/4500/6000	8000	0.0054
Z18-43P0XA20-XXXX	3.0	6.2/6.7/7.4	14.3	380/350/315	4	69.8	2000	4000/6000/8000	10000	0.0054
Z18-44P0XA30-XXXX	4.0	8.2/8.2/9.4	12.7	380/375/335	4	102.8	3000	6000/9000/12000	10000	0.0054

◆ Characteristic Curve

41P5XA10-40

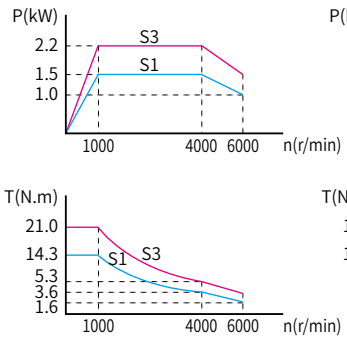

42P2XA15-60

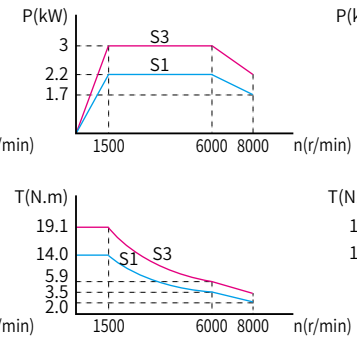

43P0XA20-80

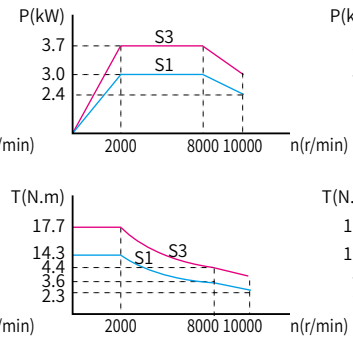

44P0XA30-A2

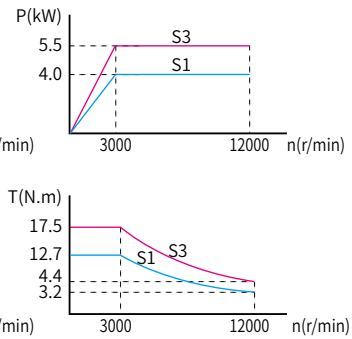

◆ Performance Index

ITEM	INDEX
Encoder (optional)	CE9-2500(Incremental)
	CE9-23B(Absolute)
	RZ12-1024(Resolver)
	SC-2048(SIN-COS)
	SC-128(SIN-COS)
	RE12-17bit(Absolute)
Shaft Type	G：Without Keyslot
	J：With Keyslot
Mounting Type	B3 B5 B35
Weight / Gross	24 (31) kg
Protection Class	IP55
Insulation Class	F Class
Rated Temperature Rise	90K
Vibration Class	A
Noise	≤70dB(A)
Environment	-15～45°C
Environment	≤95%RH

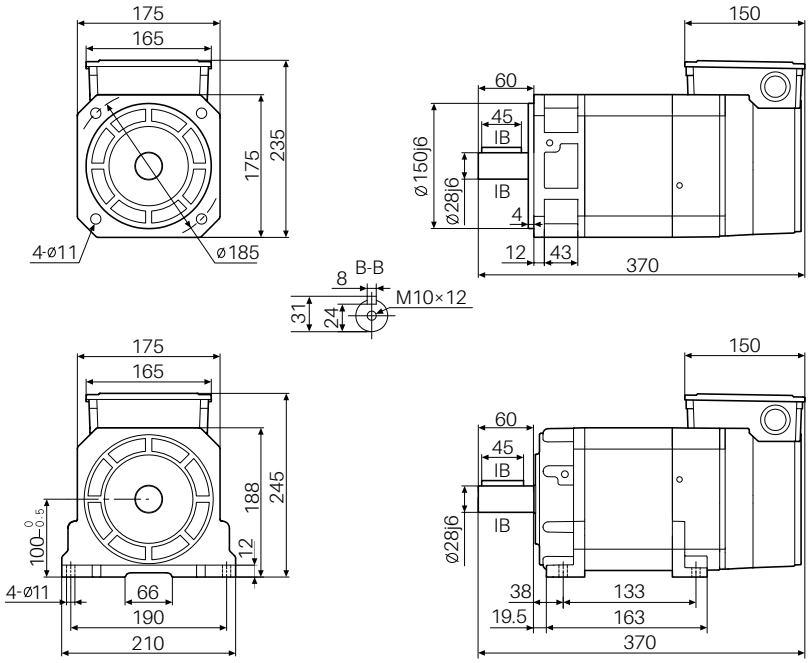

CTB超同步

Frame code：A4　Dimension：175×175×415 mm

◆ Electrical Parameter

Voltage Class：400V　Connection：Y　Fan Power：20W　Fan Voltage：380V　Fan Current：0.08A

Motor Model	Rated Power (KW)	Rated Current (A)	Rated Torque (N.m)	Rated Voltage (V)	Pole Number (P)	Rated Frequency (H)	Rated Speed (r/min)	Constant Power Max Speed (r/min)	Max Speed (r/min)	Rotational Inertia (KG.m2)
Z18-42P2XA10-XXXX	2.2	4.8/4.9/5.3	21.0	380/375/345	4	35.8	1000	2000/3000/4000	6000	0.0086
Z18-43P7XA15-XXXX	3.7	7.7/8.1/8.7	23.6	380/360/335	4	52.6	1500	3000/4500/6000	8000	0.0086
Z18-44P0XA20-XXXX	4.0	8.2/8.5/9.0	19.1	380/375/355	4	69.0	2000	4000/6000/8000	10000	0.0086
Z18-45P5XA30-XXXX	5.5	11.2/12.1/12.1	17.5	380/365/365	4	102.1	3000	6000/9000/12000	10000	0.0086

◆ Characteristic Curve

42P2XA10-40　43P7XA15-60　44P0XA20-80　45P5XA30-A2

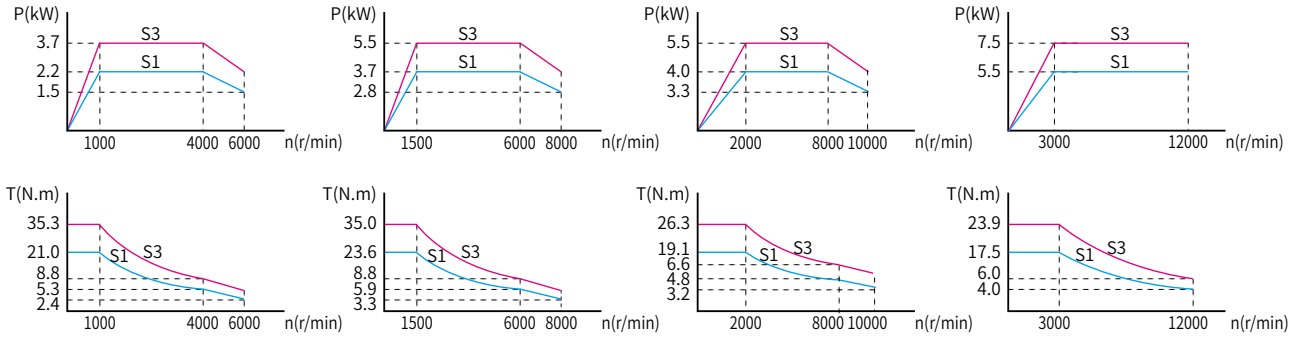

◆ Performance Index

ITEM	INDEX
Encoder (optional)	CE9-2500(Incremental)
	CE9-23B(Absolute)
	RZ12-1024(Resolver)
	SC-2048(SIN-COS)
	SC-128(SIN-COS)
	RE12-17bit(Absolute)
Shaft Type	G：Without Keyslot
	J：With Keyslot
Mounting Type	B3 B5 B35
Weight / Gross	33 (40) kg
Protection Class	IP55
Insulation Class	F Class
Rated Temperature Rise	90K
Vibration Class	A
Noise	≤70dB(A)
Environment	-15～45℃
Environment	≤95%RH

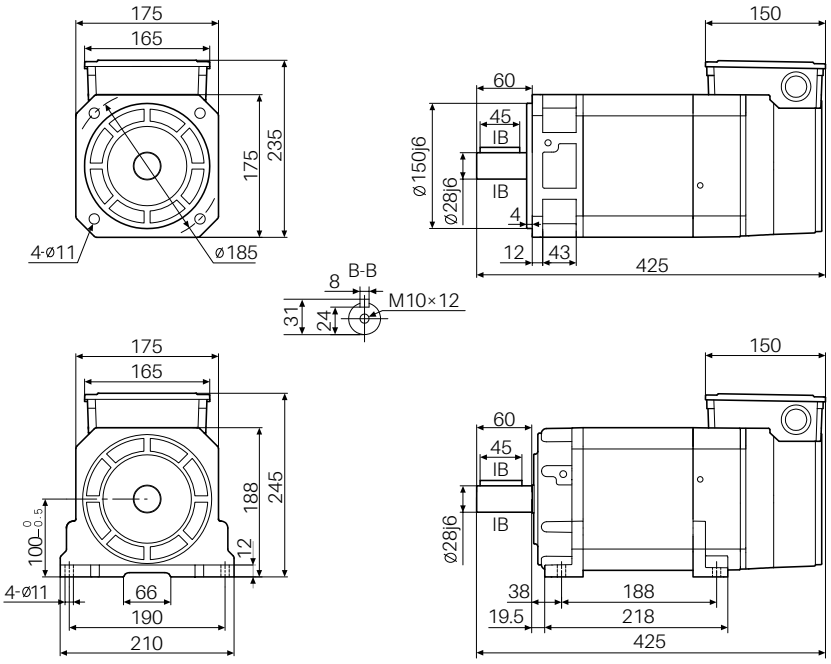

CTB超同步

Frame code：A5　Dimension：175×175×475 mm

◆ Electrical Parameter

Voltage Class：400V　Connection：Y　Fan Power：20W　Fan Voltage：380V　Fan Current：0.08A

Motor Model	Rated Power (KW)	Rated Current (A)	Rated Torque (N.m)	Rated Voltage (V)	Pole Number (P)	Rated Frequency (H)	Rated Speed (r/min)	Constant Power Max Speed (r/min)	Max Speed (r/min)	Rotational Inertia (KG.m2)
Z18-45P5GA15-60H5G	5.5	12.9	35	320	4	53.8	1500	6000	8000	0.0137

◆ Performance Index

ITEM	INDEX
Encoder (optional)	CE9A-23B
	CE9-2500
Shaft Type	G: Without Keyslot
Mounting Type	B5
Weight / Gross	33(40)kg
Protection Class	IP55
Insulation Class	F Class
Rated Temperature Rise	90K
Vibration Class	A
Noise	≤70dB(A)
Environment	-15～45°C
Environment	≤95%RH

◆ Characteristic Curve

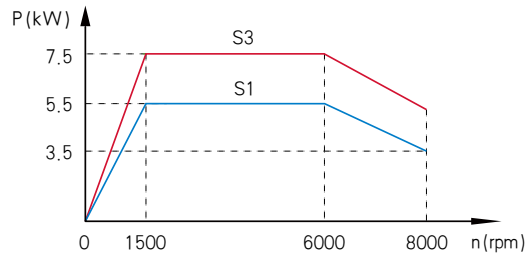

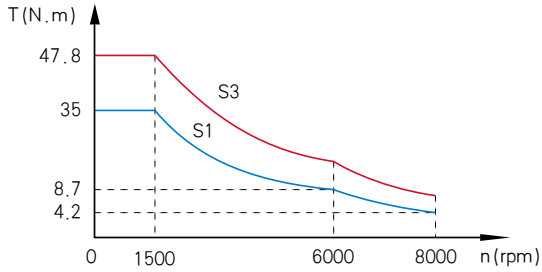

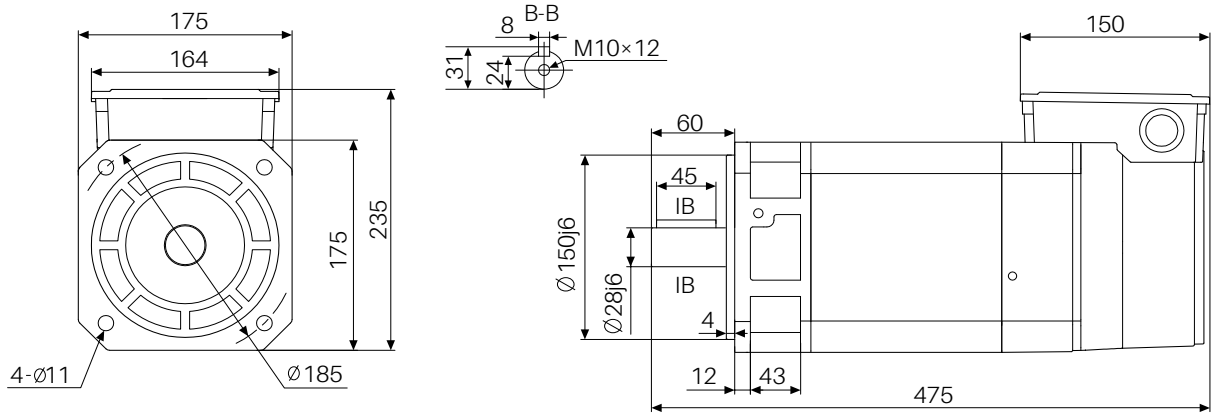

CTB超同步

Frame code：B1　Dimension：205×205×440 mm

◆ Electrical Parameter

Voltage Class：400V　Connection：Y　Fan Power：35W　Fan Voltage：380V　Fan Current：0.09A

Motor Model	Rated Power (KW)	Rated Current (A)	Rated Torque (N.m)	Rated Voltage (V)	Pole Number (P)	Rated Frequency (H)	Rated Speed (r/min)	Constant Power Max Speed (r/min)	Max Speed (r/min)	Rotational Inertia (KG.m2)
Z18-42P2XB10-XXXX	2.2	4.6/4.8/5.4	21.0	380/360/320	4	34.9	1000	2000/3000/4000	6000	0.0154
Z18-43P7XB15-XXXX	3.7	7.4/8.1/9.3	23.6	380/340/300	4	51.8	1500	3000/4500/6000	8000	0.0154
Z18-44P0XB20-XXXX	4.0	7.8/8.1/9.2	19.1	380/375/330	4	68.2	2000	4000/6000/8000	8000	0.0154
Z18-45P5XB30-XXXX	5.5	10.9/11.0/12.4	17.5	380/375/335	4	101.3	3000	6000/9000/12000	8000	0.0154

◆ Characteristic Curve

42P2XB10-40　43P7XB15-60　44P0XB20-80　45P5XB30-A2

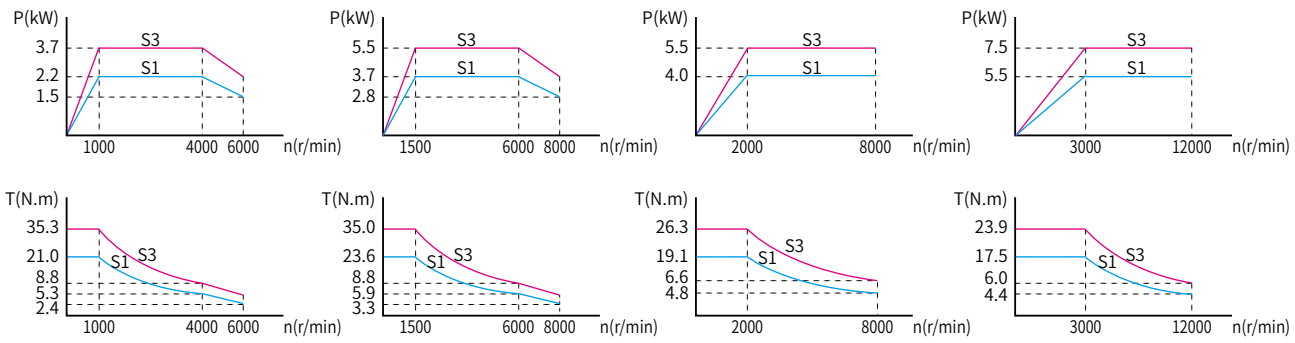

◆ Performance Index

ITEM	INDEX
Encoder (optional)	CE9-2500(Incremental)
	CE9-23B(Absolute)
	RZ12-1024(Resolver)
	SC-2048(SIN-COS)
	SC-128(SIN-COS)
	RE12-17bit(Absolute)
Shaft Type	G：Without Keyslot
	J：With Keyslot
Mounting Type	B3 B5 B35
Weight / Gross	38 (45) kg
Protection Class	IP55
Insulation Class	F Class
Rated Temperature Rise	90K
Vibration Class	A
Noise	≤70dB(A)
Environment	-15～45°C
Environment	≤95%RH

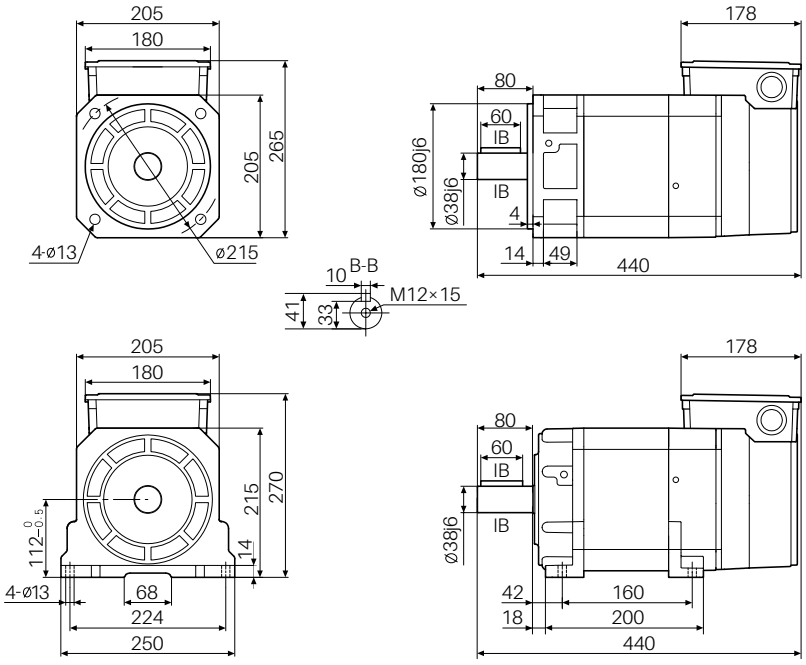

CTB超同步

Frame code：B2　Dimension：205×205×475 mm

◆ Electrical Parameter

Voltage Class：400V　Connection：Y　Fan Power：35W　Fan Voltage：380V　Fan Current：0.09A

Motor Model	Rated Power (KW)	Rated Current (A)	Rated Torque (N.m)	Rated Voltage (V)	Pole Number (P)	Rated Frequency (H)	Rated Speed (r/min)	Constant Power Max Speed (r/min)	Max Speed (r/min)	Rotational Inertia (KG.m2)
Z18-43P7XB10-XXXX	3.7	7.5/8.4/9.3	35.3	380/335/305	4	35.1	1000	2000/3000/4000	6000	0.0199
Z18-45P5XB15-XXXX	5.5	10.7/12.3/13.4	35.0	380/330/305	4	51.8	1500	3000/4500/6000	8000	0.0199
Z18-47P5XB20-XXXX	7.5	14.4/16.1/18.2	35.8	380/340/300	4	68.5	2000	4000/6000/8000	8000	0.0199
Z18-4011XB30-XXXX	11	20.7/24.5/26.8	35.0	380/320/295	4	101.8	3000	6000/9000/12000	8000	0.0199

◆ Characteristic Curve

43P7XB10-40

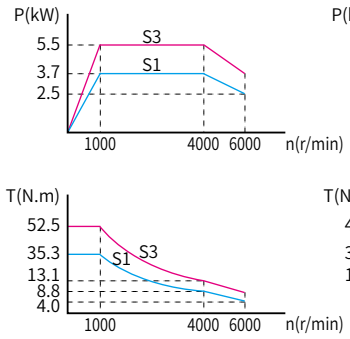

45P5XB15-60

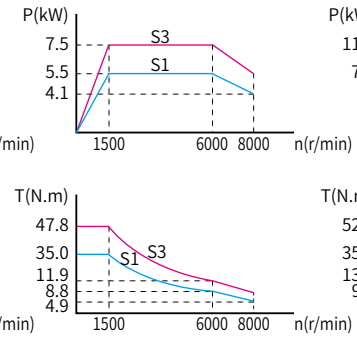

47P5XB20-80

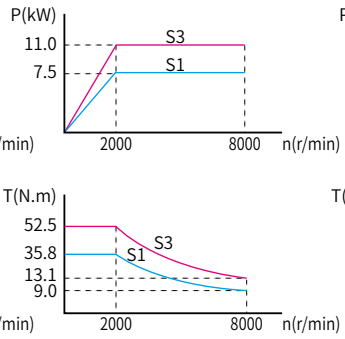

4011XB30-A2

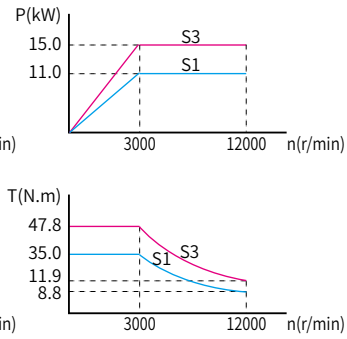

◆ Performance Index

ITEM	INDEX
Encoder (optional)	CE9-2500(Incremental)
	CE9-23B(Absolute)
	RZ12-1024(Resolver)
	SC-2048(SIN-COS)
	SC-128(SIN-COS)
	RE12-17bit(Absolute)
Shaft Type	G：Without Keyslot
	J：With Keyslot
Mounting Type	B3 B5 B35
Weight / Gross	46 (53) kg
Protection Class	IP55
Insulation Class	F Class
Rated Temperature Rise	90K
Vibration Class	A
Noise	≤70dB(A)
Environment	-15～45°C
Environment	≤95%RH

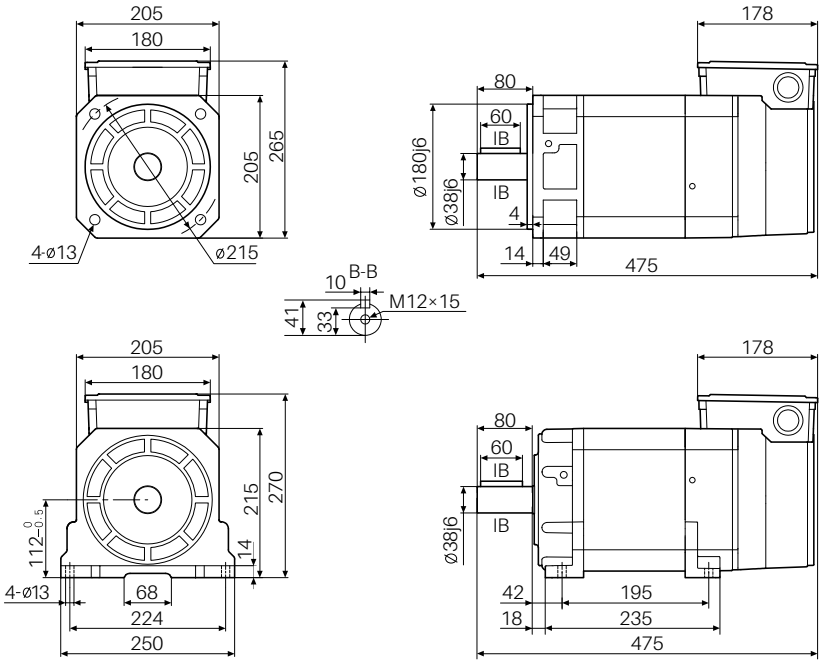

CTB超同步

Frame code：B3　Dimension：205×205×520 mm

◆ Electrical Parameter

Voltage Class：400V　Connection：Y　Fan Power：35W　Fan Voltage：380V　Fan Current：0.09A

Motor Model	Rated Power (KW)	Rated Current (A)	Rated Torque (N.m)	Rated Voltage (V)	Pole Number (P)	Rated Frequency (H)	Rated Speed (r/min)	Constant Power Max Speed (r/min)	Max Speed (r/min)	Rotational Inertia (KG.m2)
Z18-45P5XB10-XXXX	5.5	10.9/12.8/14.8	52.5	380/325/280	4	35.2	1000	2000/3000/4000	6000	0.0256
Z18-47P5XB15-XXXX	7.5	14.4/15.9/18.0	47.8	380/345/305	4	51.8	1500	3000/4500/6000	8000	0.0256
Z18-49P5XB20-XXXX	9.5	17.8/20.0/23.5	45.4	380/345/300	4	68.3	2000	4000/6000/8000	8000	0.0256
Z18-4013XB30-XXXX	13	24.3/26.8/30.2	41.4	380/350/310	4	101.6	3000	6000/9000/12000	8000	0.0256

◆ Characteristic Curve

45P5XB10-40　47P5XB15-60　49P5XB20-80　4013XB30-A2

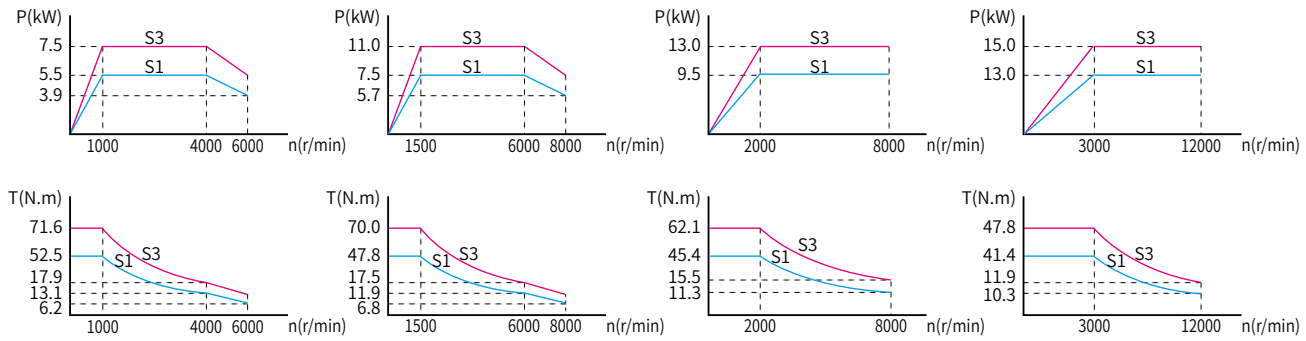

◆ Performance Index

ITEM	INDEX
Encoder (optional)	CE9-2500(Incremental)
	CE9-23B(Absolute)
	RZ12-1024(Resolver)
	SC-2048(SIN-COS)
	SC-128(SIN-COS)
	RE12-17bit(Absolute)
Shaft Type	G：Without Keyslot
	J：With Keyslot
Mounting Type	B3 B5 B35
Weight / Gross	57 (65) kg
Protection Class	IP55
Insulation Class	F Class
Rated Temperature Rise	90K
Vibration Class	A
Noise	≤70dB(A)
Environment	-15～45°C
Environment	≤95%RH

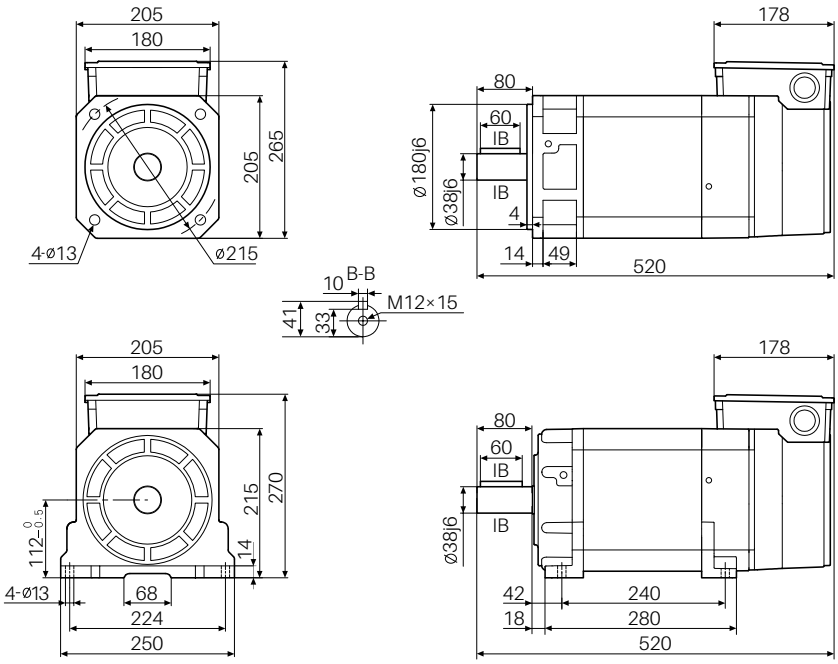

CTB超同步

Frame code：B4　Dimension：205×205×575 mm

◆ Electrical Parameter

Voltage Class：400V　Connection：Y　Fan Power：35W　Fan Voltage：380V　Fan Current：0.09A

Motor Model	Rated Power (KW)	Rated Current (A)	Rated Torque (N.m)	Rated Voltage (V)	Pole Number (P)	Rated Frequency (H)	Rated Speed (r/min)	Constant Power Max Speed (r/min)	Max Speed (r/min)	Rotational Inertia (KG.m2)
Z18-46P5XB10-XXXX	6.5	12.8/14.1/15.9	62.1	380/345/305	4	35.0	1000	2000/3000/4000	6000	0.0325
Z18-49P5XB15-XXXX	9.5	17.9/20.3/23.9	60.5	380/340/290	4	51.8	1500	3000/4500/6000	8000	0.0325
Z18-4011XB20-XXXX	11	21.3/21.3/26.0	52.5	380/375/305	4	68.0	2000	4000/6000/8000	8000	0.0325
Z18-4015XB30-XXXX	15	27.7/30.9/36.1	47.8	380/355/300	4	101.5	3000	6000/9000/12000	8000	0.0325

◆ Characteristic Curve

46P5XB10-40　49P5XB15-60　4011XB20-80　4015XB30-A2

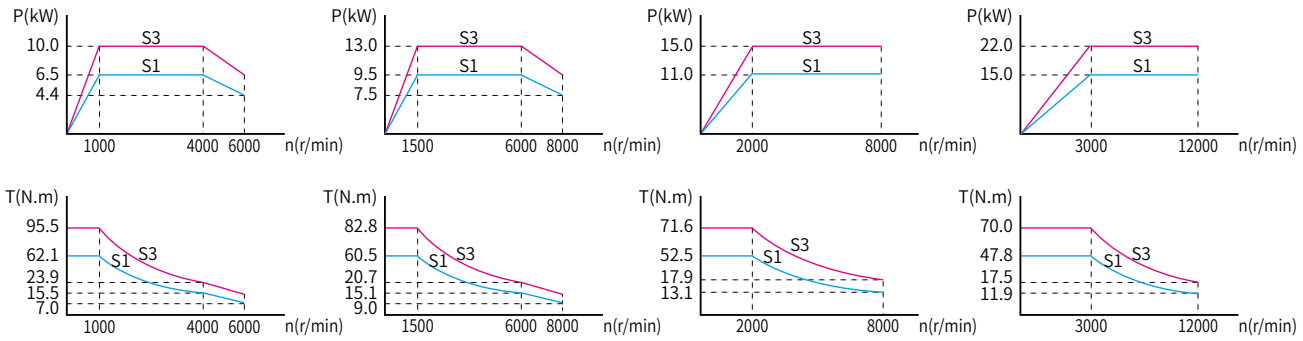

◆ Performance Index

ITEM	INDEX
Encoder (optional)	CE9-2500(Incremental)
	CE9-23B(Absolute)
	RZ12-1024(Resolver)
	SC-2048(SIN-COS)
	SC-128(SIN-COS)
	RE12-17bit(Absolute)
Shaft Type	G：Without Keyslot
	J：With Keyslot
Mounting Type	B3 B5 B35
Weight / Gross	71 (81) kg
Protection Class	IP55
Insulation Class	F Class
Rated Temperature Rise	90K
Vibration Class	A
Noise	≤70dB(A)
Environment	-15～45°C
Environment	≤95%RH

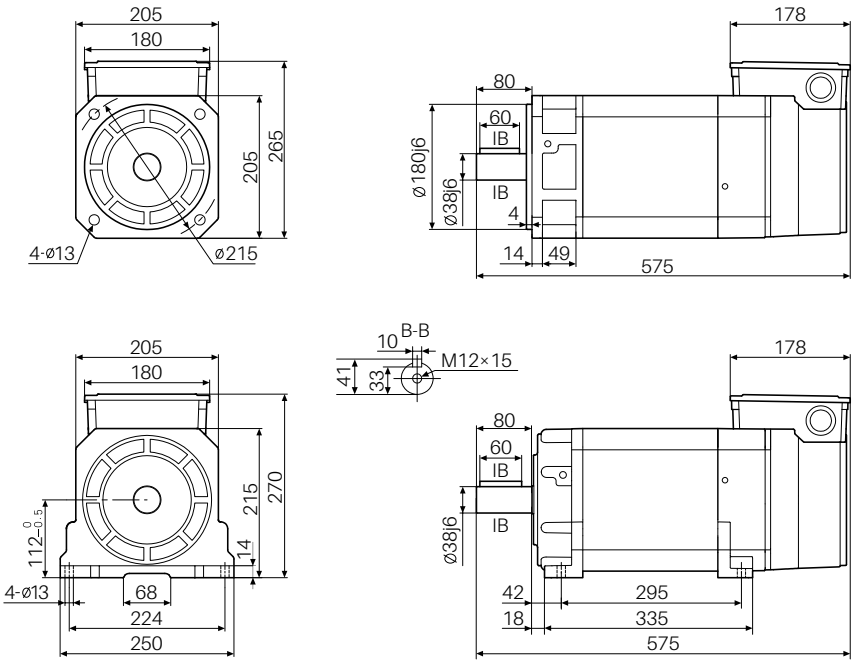

CTB超同步

Frame code：C1　Dimension：265×265×555 mm

◆ Electrical Parameter

Voltage Class：400V　Connection：Y　Fan Power：90W　Fan Voltage：380V　Fan Current：0.23A

Motor Model	Rated Power (KW)	Rated Current (A)	Rated Torque (N.m)	Rated Voltage (V)	Pole Number (P)	Rated Frequency (H)	Rated Speed (r/min)	Constant Power Max Speed (r/min)	Max Speed (r/min)	Rotational Inertia (KG.m2)
Z18-45P5XC07-XXXX	5.5	10.7/12.1/13.7	70.0	380/340/300	4	26.1	750	1500/2000/3000	4000	0.0717
Z18-47P5XC10-XXXX	7.5	14.4/16.0/18.5	71.6	380/340/295	4	34.4	1000	2000/3000/4000	6000	0.0717
Z18-4011XC15-XXXX	11	20.6/23.4/27.2	70.0	380/335/290	4	51.1	1500	3000/4500/6000	8000	0.0717
Z18-4015XC20-XXXX	15	27.9/30.6/37.2	71.6	380/345/285	4	67.7	2000	4000/6000/8000	8000	0.0717

◆ Characteristic Curve

45P5XC07-30

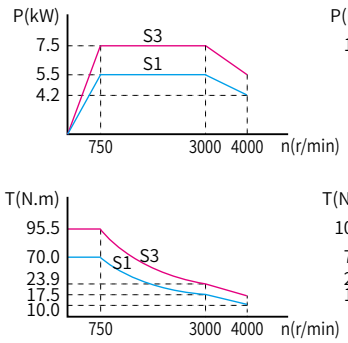

47P5XC10-40

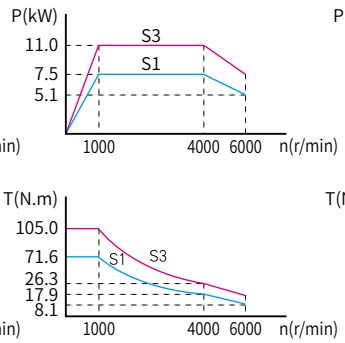

4011XC15-60

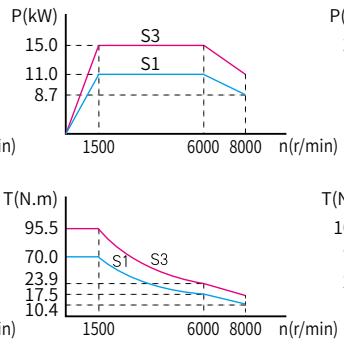

4015XC20-80

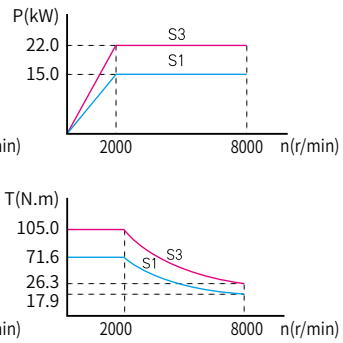

◆ Performance Index

ITEM	INDEX
Encoder (optional)	CE9-2500(Incremental)
	CE9-23B(Absolute)
	RZ12-1024(Resolver)
	SC-2048(SIN-COS)
	SC-128(SIN-COS)
	RE12-17bit(Absolute)
Shaft Type	G：Without Keyslot
	J：With Keyslot
Mounting Type	B3 B5 B35
Weight / Gross	93 (103) kg
Protection Class	IP55
Insulation Class	F Class
Rated Temperature Rise	90K
Vibration Class	A
Noise	≤70dB(A)
Environment	-15～45°C
Environment	≤95%RH

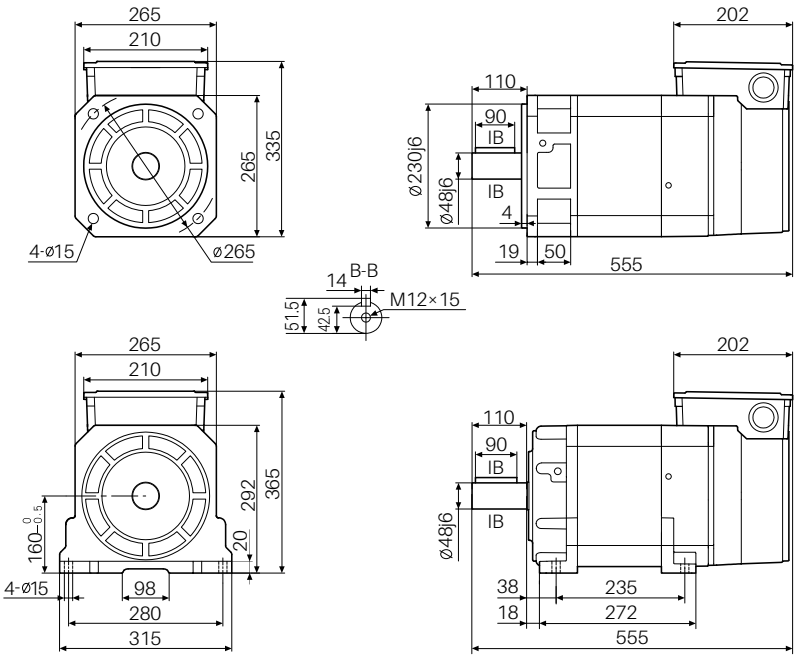

CTB超同步

Frame code：C2　Dimension：265×265×600 mm

◆ Electrical Parameter

Voltage Class：400V　Connection：Y　Fan Power：90W　Fan Voltage：380V　Fan Current：0.23A

Motor Model	Rated Power (KW)	Rated Current (A)	Rated Torque (N.m)	Rated Voltage (V)	Pole Number (P)	Rated Frequency (H)	Rated Speed (r/min)	Constant Power Max Speed (r/min)	Max Speed (r/min)	Rotational Inertia (KG.m2)
Z18-47P5XC07-XXXX	7.5	14.4/16.4/19.0	95.5	380/335/290	4	26.1	750	1500/2000/3000	4000	0.0890
Z18-4011XC10-XXXX	11	20.6/23.5/26.7	105.1	380/335/295	4	34.7	1000	2000/3000/4000	6000	0.0890
Z18-4015XC15-XXXX	15	27.4/31.1/37.8	95.5	380/340/280	4	51.2	1500	3000/4500/6000	8000	0.0890
Z18-4022XC20-XXXX	22	40.9/46.1/52.6	105.1	380/335/295	4	67.7	2000	4000/6000/8000	8000	0.0890

◆ Characteristic Curve

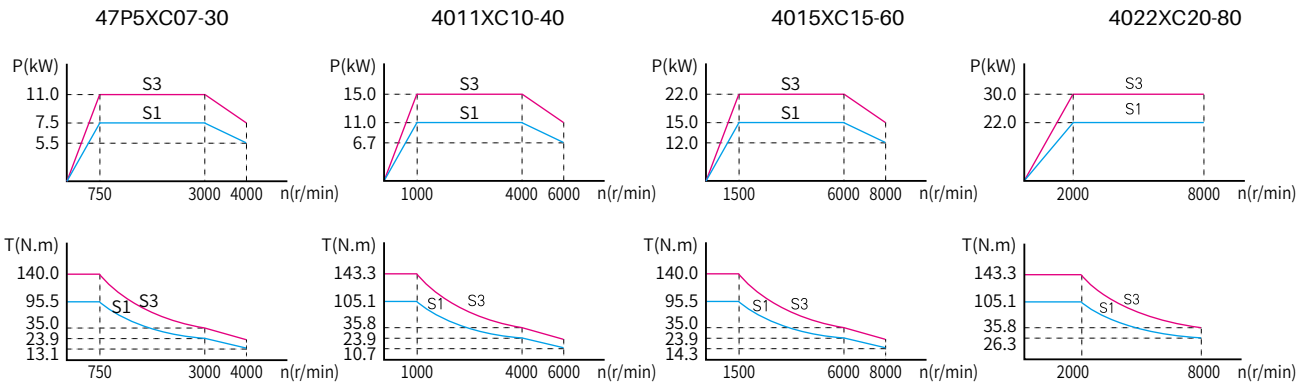

◆ Performance Index

ITEM	INDEX
Encoder (optional)	CE9-2500(Incremental)
	CE9-23B(Absolute)
	RZ12-1024(Resolver)
	SC-2048(SIN-COS)
	SC-128(SIN-COS)
	RE12-17bit(Absolute)
Shaft Type	G：Without Keyslot
	J：With Keyslot
Mounting Type	B3 B5 B35
Weight / Gross	111 (121) kg
Protection Class	IP55
Insulation Class	F Class
Rated Temperature Rise	90K
Vibration Class	A
Noise	≤70dB(A)
Environment	-15～45°C
Environment	≤95%RH

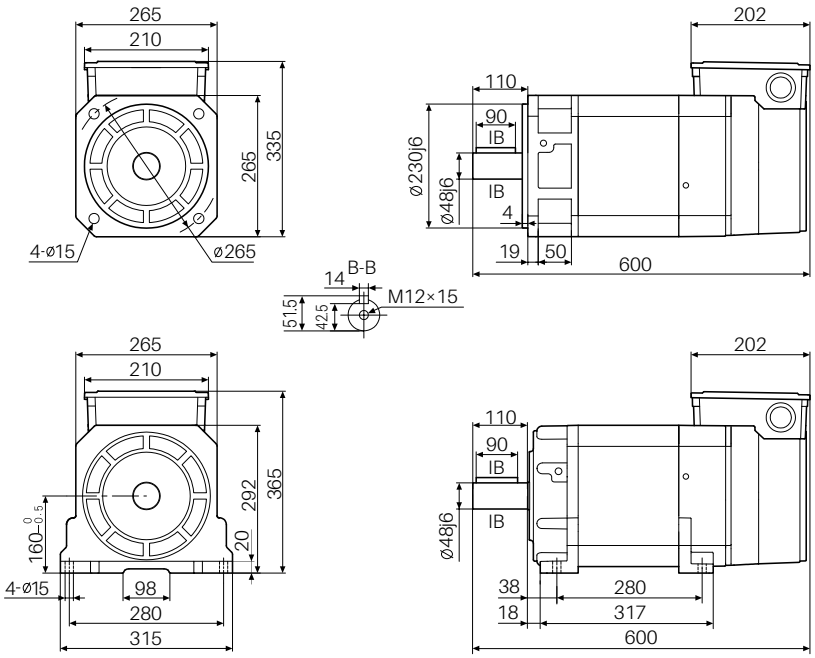

CTB超同步

Frame code：C3　Dimension：265×265×640 mm

◆ Electrical Parameter

Voltage Class：400V　Connection：Y　Fan Power：90W　Fan Voltage：380V　Fan Current：0.23A

Motor Model	Rated Power (KW)	Rated Current (A)	Rated Torque (N.m)	Rated Voltage (V)	Pole Number (P)	Rated Frequency (H)	Rated Speed (r/min)	Constant Power Max Speed (r/min)	Max Speed (r/min)	Rotational Inertia (KG.m2)
Z18-4010XC07-XXXX	10	19.1/21.8/25.1	127.3	380/335/290	4	26.1	750	1500/2000/3000	4000	0.1057
Z18-4013XC10-XXXX	13	24.4/28.1/33.1	124.2	380/330/280	4	34.4	1000	2000/3000/4000	6000	0.1057
Z18-4018XC15-XXXX	18.5	34.5/38.7/43.4	117.8	380/335/300	4	51.1	1500	3000/4500/6000	8000	0.1057
Z18-4025XC20-XXXX	25	45.2/50.8/58.9	119.4	380/340/295	4	67.8	2000	4000/6000/8000	8000	0.1057

◆ Characteristic Curve

4011XC07-30　　4013XC10-40　　4018XC15-60　　4025XC20-80

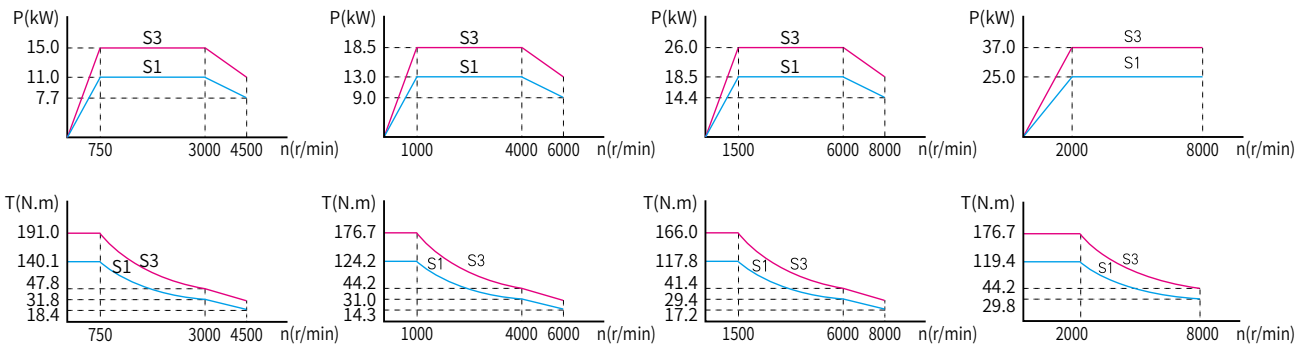

◆ Performance Index

ITEM	INDEX
Encoder (optional)	CE9-2500(Incremental)
	CE9-23B(Absolute)
	RZ12-1024(Resolver)
	SC-2048(SIN-COS)
	SC-128(SIN-COS)
	RE12-17bit(Absolute)
Shaft Type	G：Without Keyslot
	J：With Keyslot
Mounting Type	B3 B5 B35
Weight / Gross	126 (136) kg
Protection Class	IP55
Insulation Class	F Class
Rated Temperature Rise	90K
Vibration Class	A
Noise	≤70dB(A)
Environment	-15～45°C
Environment	≤95%RH

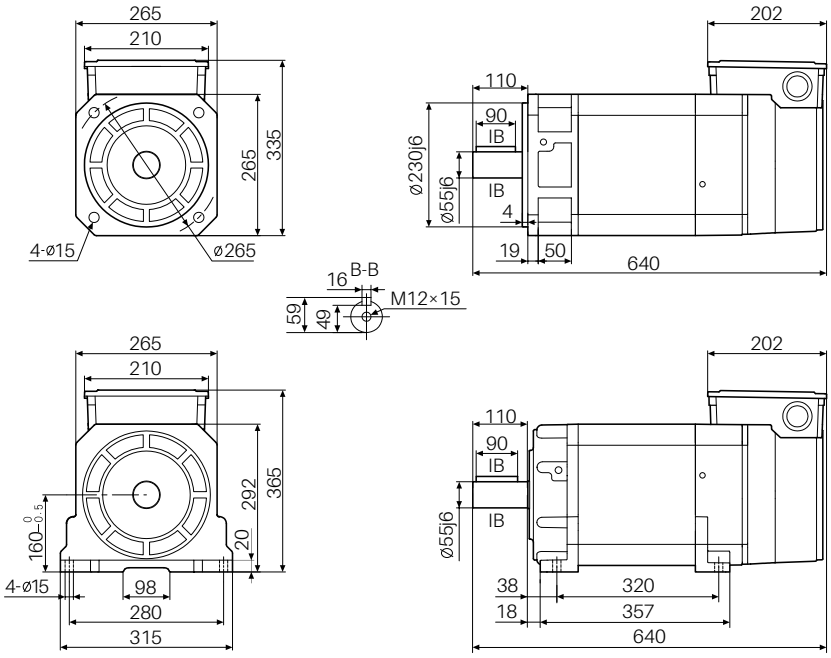

CTB超同步

Frame code：C4　Dimension：265×265×670 mm

◆ Electrical Parameter

Voltage Class：400V　Connection：Y　Fan Power：90W　Fan Voltage：380V　Fan Current：0.23A

Motor Model	Rated Power (KW)	Rated Current (A)	Rated Torque (N.m)	Rated Voltage (V)	Pole Number (P)	Rated Frequency (H)	Rated Speed (r/min)	Constant Power Max Speed (r/min)	Max Speed (r/min)	Rotational Inertia (KG.m2)
Z18-4011XC07-XXXX	11	20.8/24.2/28.3	140.1	380/330/280	4	26.1	750	1500/2000/3000	4000	0.1186
Z18-4015XC10-XXXX	15	28.3/33.3/36.9	143.3	380/315/290	4	34.4	1000	2000/3000/4000	6000	0.1186
Z18-4022XC15-XXXX	22	40.5/45.8/52.1	140.1	380/335/295	4	51.0	1500	3000/4500/6000	8000	0.1186
Z18-4030XC20-XXXX	30	54.2/62.6/74.3	143.3	380/330/280	4	67.8	2000	4000/6000/8000	8000	0.1186

◆ Characteristic Curve

4011XC07-30　4015XC10-40　4022XC15-60　4030XC20-80

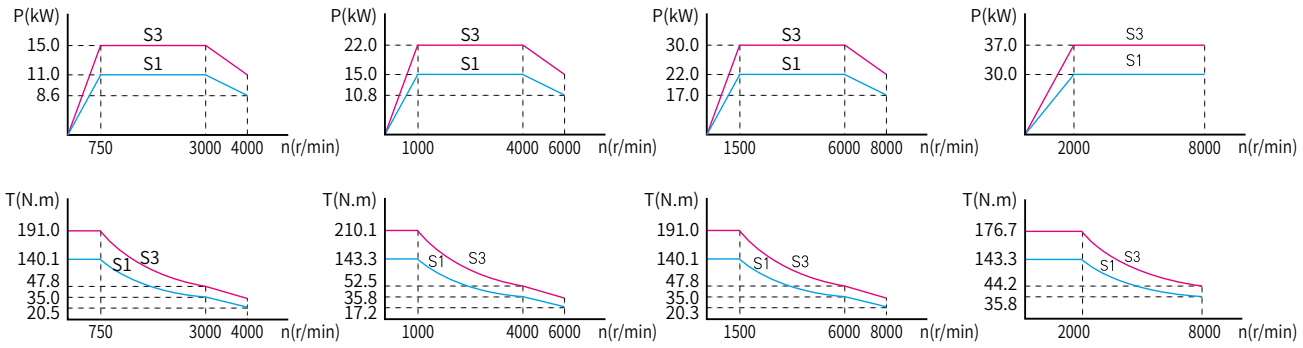

◆ Performance Index

ITEM	INDEX
Encoder (optional)	CE9-2500(Incremental)
	CE9-23B(Absolute)
	RZ12-1024(Resolver)
	SC-2048(SIN-COS)
	SC-128(SIN-COS)
	RE12-17bit(Absolute)
Shaft Type	G：Without Keyslot
	J：With Keyslot
Mounting Type	B3 B5 B35
Weight / Gross	138 (148) kg
Protection Class	IP55
Insulation Class	F Class
Rated Temperature Rise	90K
Vibration Class	A
Noise	≤70dB(A)
Environment	-15～45°C
Environment	≤95%RH

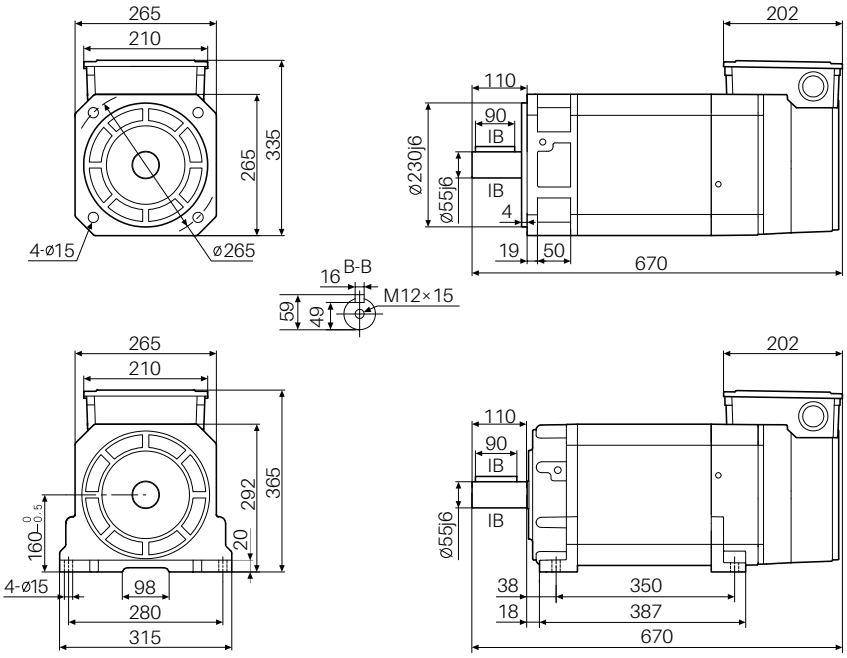

CTB超同步

Frame code：D1　Dimension：300×300×690 mm

◆ Electrical Parameter

Voltage Class：400V　Connection：Y　Fan Power：70W　Fan Voltage：380V　Fan Current：0.39A

Motor Model	Rated Power (KW)	Rated Current (A)	Rated Torque (N.m)	Rated Voltage (V)	Pole Number (P)	Rated Frequency (H)	Rated Speed (r/min)	Constant Power Max Speed (r/min)	Max Speed (r/min)	Rotational Inertia (KG.m2)
Z18-47P5XD05-XXXX	7.5	14.3/15.6/17.6	143	380/350/310	4	17.5	500	1000/1500/2000	2500	0.1587
Z18-4011XD07-XXXX	11	20.3/21.7/24.5	140	380/355/315	4	25.8	750	1500/2000/3000	4000	0.1587
Z18-4015XD10-XXXX	15	27.3/28.7/32.3	143	380/360/320	4	34.1	1000	2000/3000/4000	4500	0.1587
Z18-4022XD15-XXXX	22	39.0/40.3/45.8	140	380/370/325	4	50.8	1500	3000/4500/6000	6000	0.1587

◆ Characteristic Curve

47P5XD05-20　　4011XD07-30　　4015XD10-40　　4022XD15-60

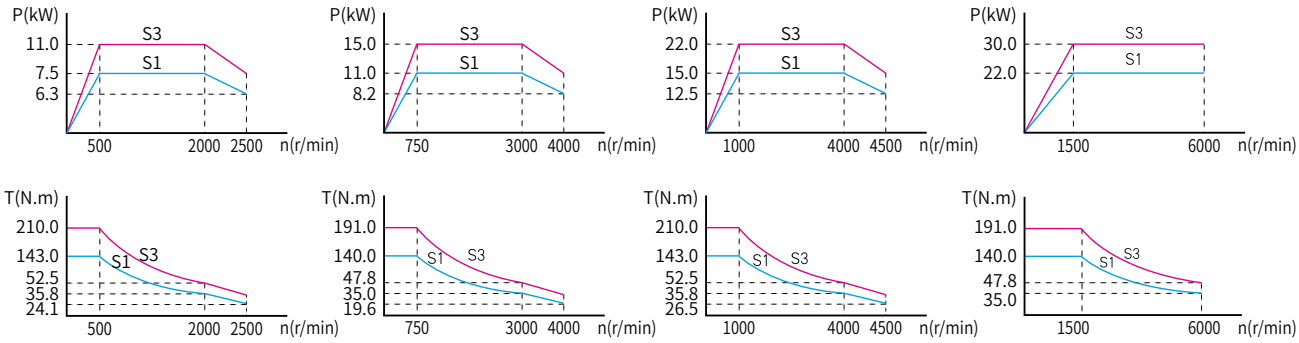

◆ Performance Index

ITEM	INDEX
Encoder (optional)	CE9-2500(Incremental)
	CE9-23B(Absolute)
	RZ12-1024(Resolver)
	SC-2048(SIN-COS)
	SC-128(SIN-COS)
	RE12-17bit(Absolute)
Shaft Type	G：Without Keyslot
	J：With Keyslot
Mounting Type	B3 B5 B35
Weight / Gross	187 (199) kg
Protection Class	IP55
Insulation Class	F Class
Rated Temperature Rise	90K
Vibration Class	A
Noise	≤70dB(A)
Environment	-15～45°C
Environment	≤95%RH

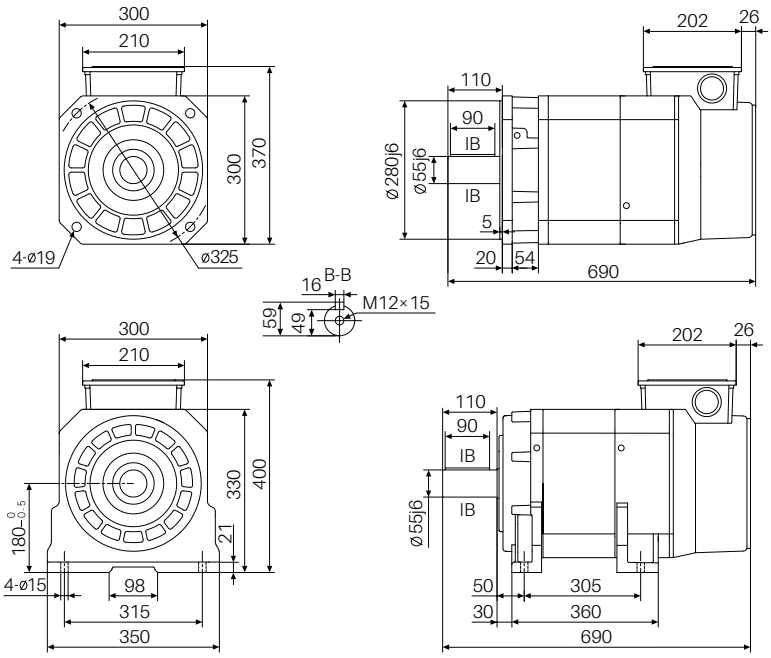

CTB超同步

Frame code：D2　Dimension：300×300×745 mm

◆ Electrical Parameter

Voltage Class：400V　Connection：Y　Fan Power：70W　Fan Voltage：380V　Fan Current：0.39A

Motor Model	Rated Power (KW)	Rated Current (A)	Rated Torque (N.m)	Rated Voltage (V)	Pole Number (P)	Rated Frequency (H)	Rated Speed (r/min)	Constant Power Max Speed (r/min)	Max Speed (r/min)	Rotational Inertia (KG.m2)
Z18-49P5XD05-XXXX	9.5	18.1/19.6/22.1	181	380/350/310	4	17.4	500	1000/1500/2000	2500	0.1882
Z18-4013XD07-XXXX	13	23.9/25.3/27.5	166	380/360/330	4	25.7	750	1500/2000/3000	4000	0.1882
Z18-4018XD10-XXXX	18.5	33.4/36.3/40.9	177	380/350/310	4	34.1	1000	2000/3000/4000	4500	0.1882
Z18-4026XD15-XXXX	26	46.1/48.9/53.2	166	380/360/330	4	50.7	1500	3000/4500/6000	6000	0.1882

◆ Characteristic Curve

49P5XD05-20　　4013XD07-30　　4018XD10-40　　4026XD15-60

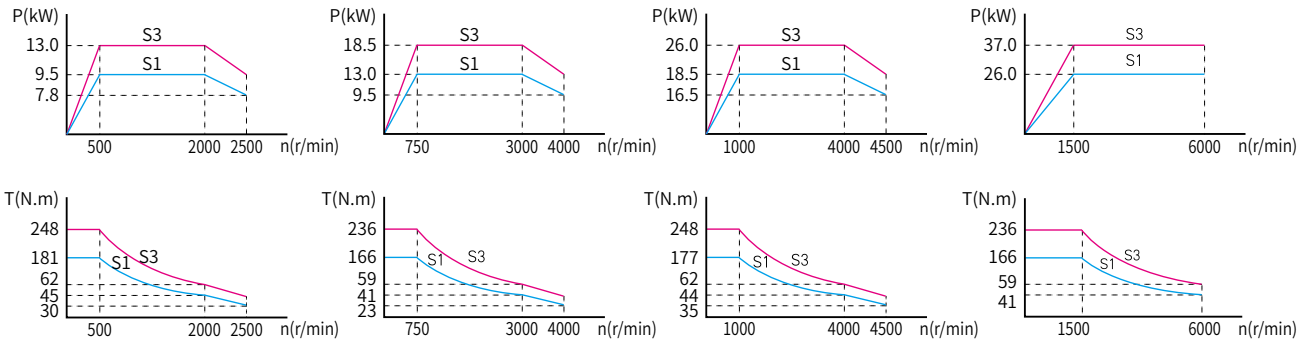

◆ Performance Index

ITEM	INDEX
Encoder (optional)	CE9-2500(Incremental)
	CE9-23B(Absolute)
	RZ12-1024(Resolver)
	SC-2048(SIN-COS)
	SC-128(SIN-COS)
	RE12-17bit(Absolute)
Shaft Type	G：Without Keyslot
	J：With Keyslot
Mounting Type	B3 B5 B35
Weight / Gross	208 (220) kg
Protection Class	IP55
Insulation Class	F Class
Rated Temperature Rise	90K
Vibration Class	A
Noise	≤70dB(A)
Environment	-15～45℃
Environment	≤95%RH

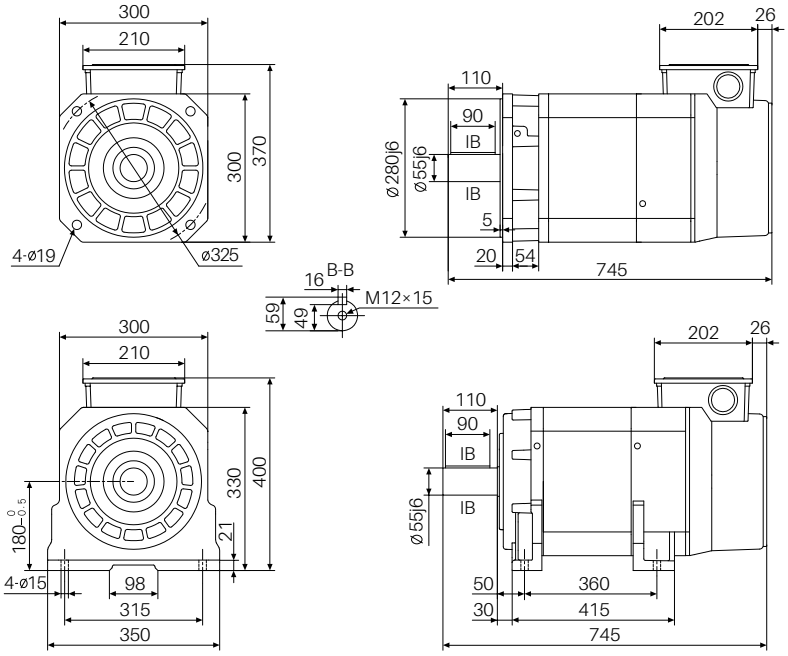

CTB超同步

Frame code：D3　Dimension：300×300×770 mm

◆ Electrical Parameter

Voltage Class：400V　Connection：Y　Fan Power：70W　Fan Voltage：380V　Fan Current：0.39A

Motor Model	Rated Power (KW)	Rated Current (A)	Rated Torque (N.m)	Rated Voltage (V)	Pole Number (P)	Rated Frequency (H)	Rated Speed (r/min)	Constant Power Max Speed (r/min)	Max Speed (r/min)	Rotational Inertia (KG.m2)
Z18-4011XD05-XXXX	11	20.7/21.4/24	210.1	380/370/330	4	17.5	500	1000/1500/2000	2500	0.2046
Z18-4015XD07-XXXX	15	27.3/28.0/32.6	191	380/370/320	4	25.8	750	1500/2000/3000	4000	0.2046
Z18-4022XD10-XXXX	22	39.3/40.7/45.6	210.1	380/370/330	4	34.2	1000	2000/3000/4000	4500	0.2046
Z18-4030XD15-XXXX	30	52.7/55.9/65.7	191	380/360/305	4	50.8	1500	3000/4500/6000	6000	0.2046

◆ Characteristic Curve

4011XE05-20

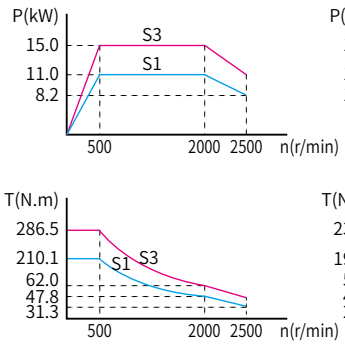

4015XE07-30

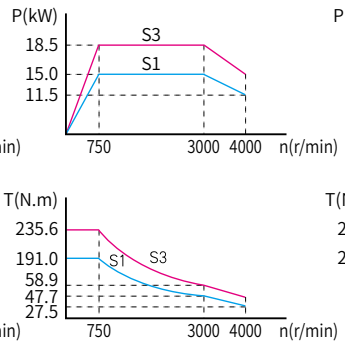

4022XE10-40

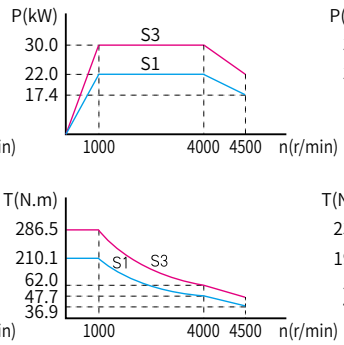

4030XE15-60

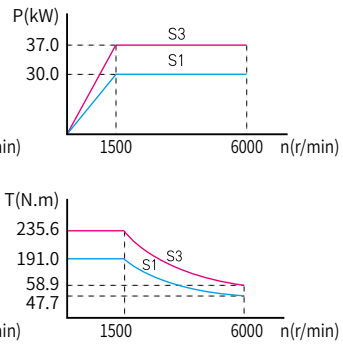

◆ Performance Index

ITEM	INDEX
Encoder (optional)	CE9-2500(Incremental)
	CE9-23B(Absolute)
	RZ12-1024(Resolver)
	SC-2048(SIN-COS)
	SC-128(SIN-COS)
	RE12-17bit(Absolute)
Shaft Type	G：Without Keyslot
	J：With Keyslot
Mounting Type	B3 B5 B35
Weight / Gross	221 (233) kg
Protection Class	IP55
Insulation Class	F Class
Rated Temperature Rise	90K
Vibration Class	A
Noise	≤70dB(A)
Environment	-15～45°C
Environment	≤95%RH

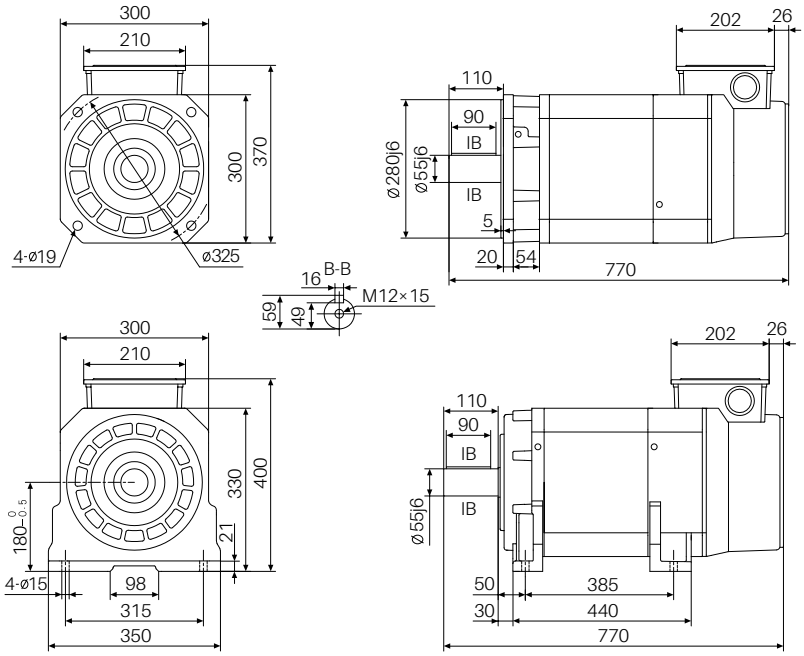

CTB超同步

Frame code：D4　Dimension：300×300×840 mm

◆ Electrical Parameter

Voltage Class：400V　Connection：Y　Fan Power：70W　Fan Voltage：380V　Fan Current：0.39A

Motor Model	Rated Power (KW)	Rated Current (A)	Rated Torque (N.m)	Rated Voltage (V)	Pole Number (P)	Rated Frequency (H)	Rated Speed (r/min)	Constant Power Max Speed (r/min)	Max Speed (r/min)	Rotational Inertia (KG.m2)
Z18-4013XD05-XXXX	13	24.4/26.9/29.9	248	380/345/310	4	17.4	500	1000/1500/2000	2500	0.2505
Z18-4018XD07-XXXX	18.5	33.4/34.4/39.9	236	380/370/320	4	25.8	750	1500/2000/3000	4000	0.2505
Z18-4026XD10-XXXX	26	46.7/50.4/57.9	248	380/350/305	4	34.1	1000	2000/3000/4000	4500	0.2505
Z18-4037XD15-XXXX	37	65.3/71.9/79.9	236	380/345/310	4	50.7	1500	3000/4500/6000	6000	0.2505

◆ Characteristic Curve

4013XD05-20　　4018XD07-30　　4026XD10-40　　4037XD15-60

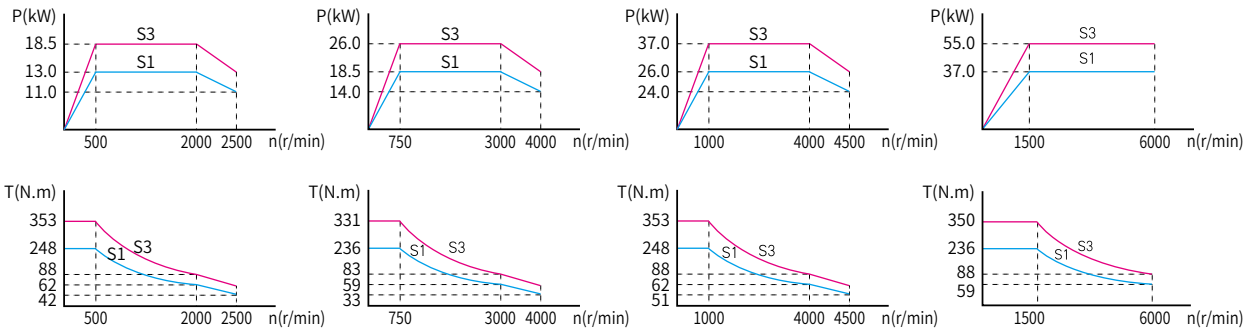

◆ Performance Index

ITEM	INDEX
Encoder (optional)	CE9-2500(Incremental)
	CE9-23B(Absolute)
	RZ12-1024(Resolver)
	SC-2048(SIN-COS)
	SC-128(SIN-COS)
	RE12-17bit(Absolute)
Shaft Type	G：Without Keyslot
	J：With Keyslot
Mounting Type	B3 B5 B35
Weight / Gross	255 (267) kg
Protection Class	IP55
Insulation Class	F Class
Rated Temperature Rise	90K
Vibration Class	A
Noise	≤70dB(A)
Environment	-15～45°C
Environment	≤95%RH

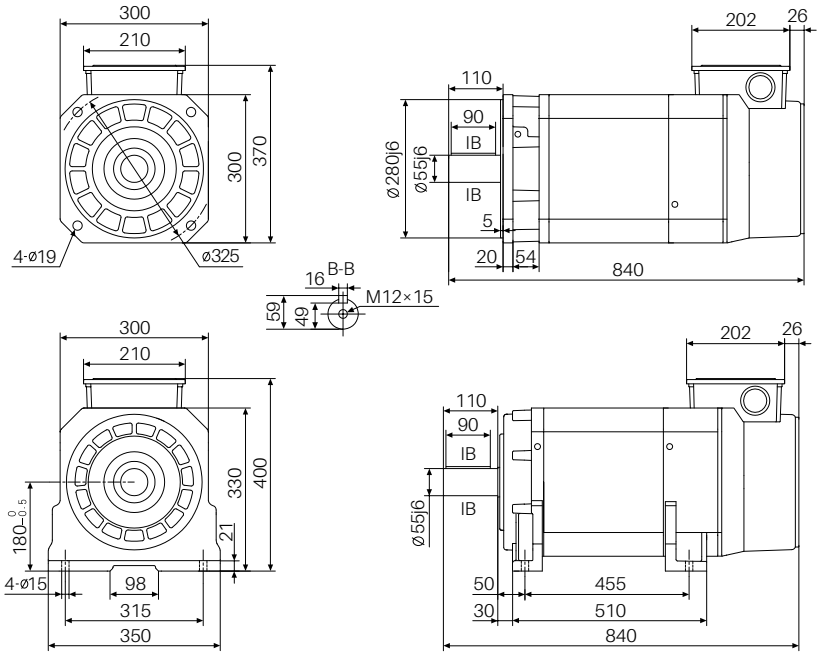

CTB超同步

Frame code：E1　Dimension：320×320×770 mm

◆ Electrical Parameter

Voltage Class：400V　Connection：Y　Fan Power：70W　Fan Voltage：380V　Fan Current：0.39A

Motor Model	Rated Power (KW)	Rated Current (A)	Rated Torque (N.m)	Rated Voltage (V)	Pole Number (P)	Rated Frequency (H)	Rated Speed (r/min)	Constant Power Max Speed (r/min)	Max Speed (r/min)	Rotational Inertia (KG.m2)
Z18-4011XE05-XXXX	11	20.9/22/26	210.1	380/360/305	4	17.7	500	1000/1500/2000	2500	0.2372
Z18-4015XE07-XXXX	15	27.4/30.2/35.4	191	380/345/295	4	25.8	750	1500/2000/3000	4000	0.2372
Z18-4022XE10-XXXX	22	39.3/44.1/48.5	210.1	380/340/310	4	34.3	1000	2000/3000/4000	4500	0.2372
Z18-4030XE15-XXXX	30	52.7/58.4/67.3	191	380/345/300	4	50.9	1500	3000/4500/6000	6000	0.2372

◆ Characteristic Curve

4011XE05-20　　4015XE07-30　　4022XE10-40　　4030XE15-60

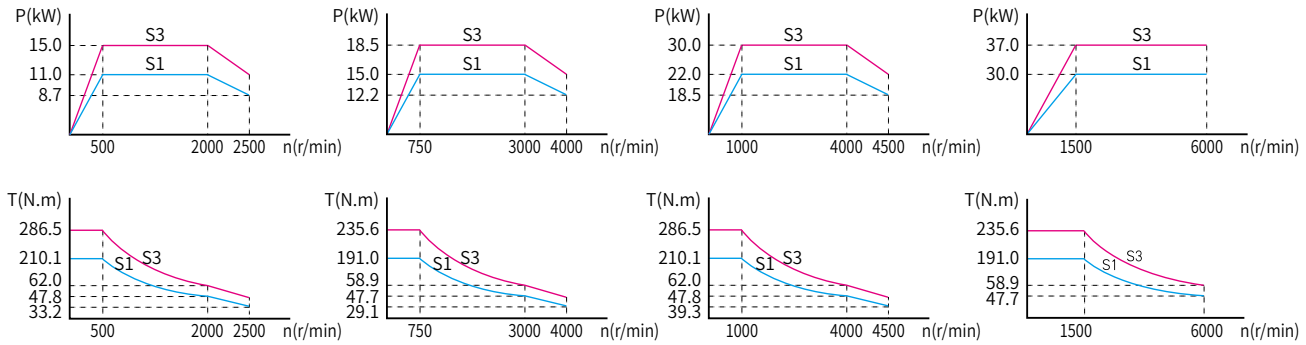

◆ Performance Index

ITEM	INDEX
Encoder (optional)	CE9-2500(Incremental)
	CE9-23B(Absolute)
	RZ12-1024(Resolver)
	SC-2048(SIN-COS)
	SC-128(SIN-COS)
	RE12-17bit(Absolute)
Shaft Type	G：Without Keyslot
	J：With Keyslot
Mounting Type	B3 B5 B35
Weight / Gross	227 (239) kg
Protection Class	IP55
Insulation Class	F Class
Rated Temperature Rise	90K
Vibration Class	A
Noise	≤70dB(A)
Environment	-15～45°C
Environment	≤95%RH

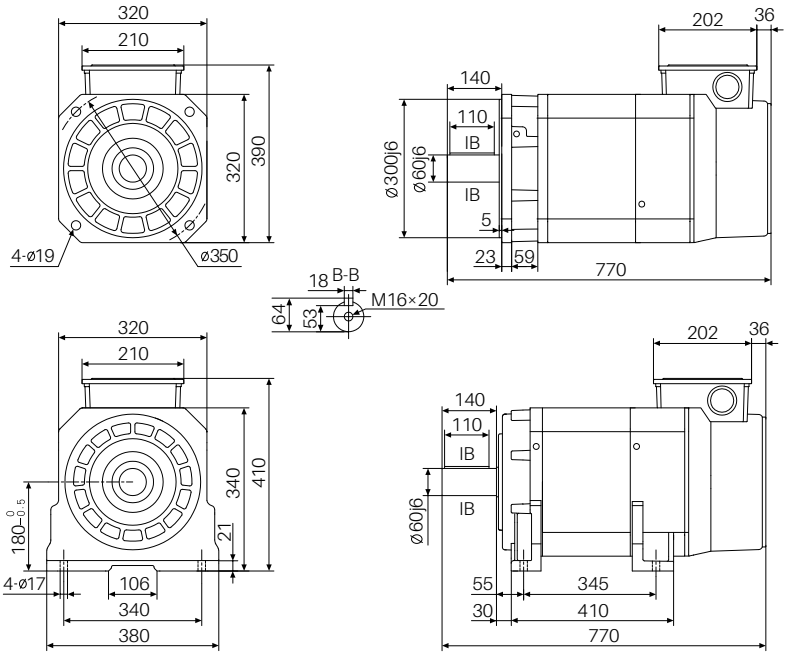

CTB超同步

Frame code：E2　Dimension：320×320×830 mm

◆ Electrical Parameter

Voltage Class：400V　Connection：Y　Fan Power：70W　Fan Voltage：380V　Fan Current：0.39A

Motor Model	Rated Power (KW)	Rated Current (A)	Rated Torque (N.m)	Rated Voltage (V)	Pole Number (P)	Rated Frequency (H)	Rated Speed (r/min)	Constant Power Max Speed (r/min)	Max Speed (r/min)	Rotational Inertia (KG.m2)
Z18-4013XE05-XXXX	13	24.4/27.3/30.4	248	380/340/305	4	17.5	500	1000/1500/2000	2500	0.2918
Z18-4018XE07-XXXX	18.5	33.8/37.1/42.7	236	380/345/300	4	25.7	750	1500/2000/3000	4000	0.2918
Z18-4026XE10-XXXX	26	46.5/53.3/59.9	248	380/330/295	4	34.1	1000	2000/3000/4000	4500	0.2918
Z18-4037XE15-XXXX	37	64.6/72.9/81.0	236	380/340/300	4	50.8	1500	3000/4500/6000	6000	0.2918

◆ Characteristic Curve

4013XE05-20　　4018XE07-30　　4026XE10-40　　4037XE15-60

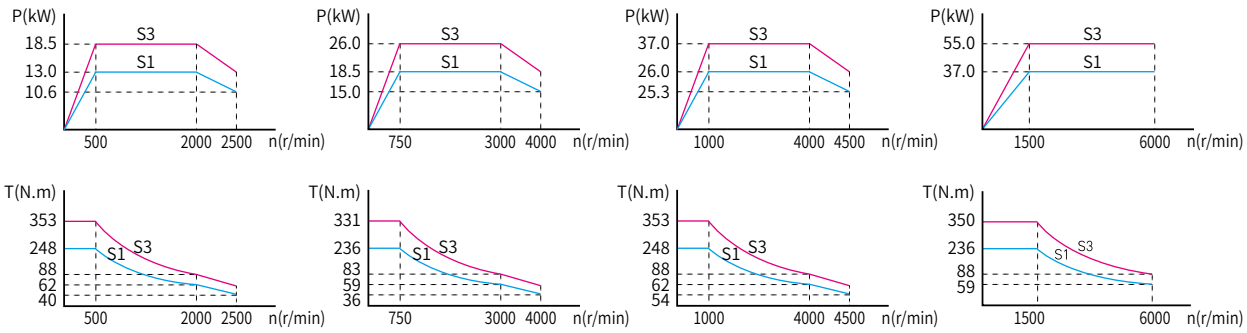

◆ Performance Index

ITEM	INDEX
Encoder (optional)	CE9-2500(Incremental)
	CE9-23B(Absolute)
	RZ12-1024(Resolver)
	SC-2048(SIN-COS)
	SC-128(SIN-COS)
	RE12-17bit(Absolute)
Shaft Type	G：Without Keyslot
	J：With Keyslot
Mounting Type	B3 B5 B35
Weight / Gross	260 (272) kg
Protection Class	IP55
Insulation Class	F Class
Rated Temperature Rise	90K
Vibration Class	A
Noise	≤70dB(A)
Environment	-15～45°C
Environment	≤95%RH

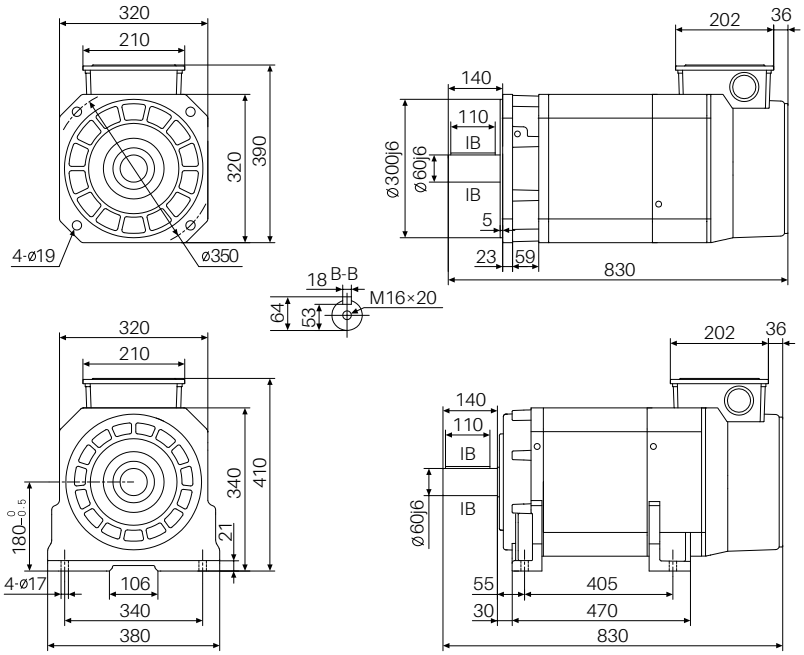

CTB超同步

Frame code：E3　Dimension：320×320×905 mm

◆ Electrical Parameter

Voltage Class：400V　Connection：Y　Fan Power：70W　Fan Voltage：380V　Fan Current：0.39A

Motor Model	Rated Power (KW)	Rated Current (A)	Rated Torque (N.m)	Rated Voltage (V)	Pole Number (P)	Rated Frequency (H)	Rated Speed (r/min)	Constant Power Max Speed (r/min)	Max Speed (r/min)	Rotational Inertia (KG.m2)
Z18-4015XE05-XXX	15	27.8/29.4/34.1	287	380/360/310	4	17.4	500	1000/1500/2000	2500	0.3602
Z18-4022XE07-XXX	22	39.5/43.0/48.5	280	380/350/310	4	25.8	750	1500/2000/3000	4000	0.3602
Z18-4030XE10-XXX	30	53.2/56.3/66.2	287	380/360/305	4	34.1	1000	2000/3000/4000	4500	0.3602
Z18-4045XE15-XXX	45	78.8/87.9/98.2	287	380/340/305	4	50.7	1500	3000/4500/6000	6000	0.3602

◆ Characteristic Curve

4015XE05-20　　4022XE07-30　　4030XE10-40　　4045XE15-60

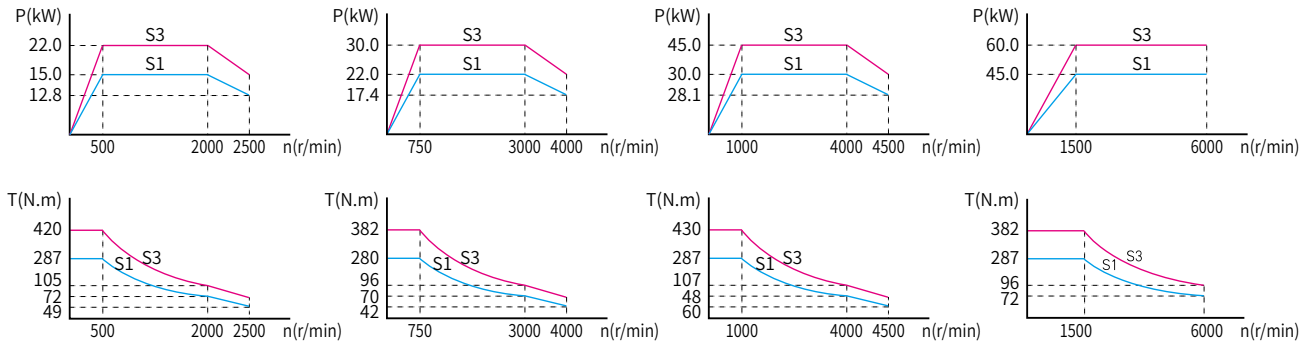

◆ Performance Index

ITEM	INDEX
Encoder (optional)	CE9-2500(Incremental)
	CE9-23B(Absolute)
	RZ12-1024(Resolver)
	SC-2048(SIN-COS)
	SC-128(SIN-COS)
	RE12-17bit(Absolute)
Shaft Type	G：Without Keyslot
	J：With Keyslot
Mounting Type	B3 B5 B35
Weight / Gross	301 (313) kg
Protection Class	IP55
Insulation Class	F Class
Rated Temperature Rise	90K
Vibration Class	A
Noise	≤70dB(A)
Environment	-15～45°C
Environment	≤95%RH

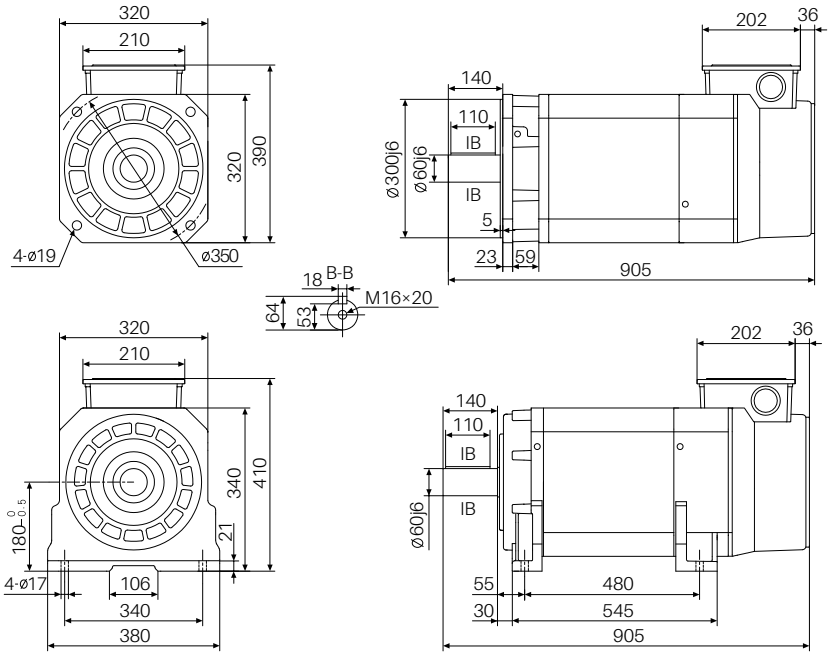

CTB超同步

Frame code：E4　Dimension：320×320×1000 mm

◆ Electrical Parameter

Voltage Class：400V　Connection：Y　Fan Power：70W　Fan Voltage：380V　Fan Current：0.39A

Motor Model	Rated Power (KW)	Rated Current (A)	Rated Torque (N.m)	Rated Voltage (V)	Pole Number (P)	Rated Frequency (H)	Rated Speed (r/min)	Constant Power Max Speed (r/min)	Max Speed (r/min)	Rotational Inertia (KG.m2)
Z18-4018XE05-XXXX	18.5	34.1/37.1/40.6	353	380/350/320	4	17.4	500	1000/1500/2000	2500	0.4467
Z18-4030XE07-XXXX	30	54.3/58.6/68.4	382	380/350/300	4	25.7	750	1500/2000/3000	4000	0.4467
Z18-4037XE10-XXXX	37	65.4/69.7/77.8	353	380/360/320	4	34.0	1000	2000/3000/4000	4500	0.4467
Z18-4055XE15-XXXX	55	96.1/109.2/128.1	350	380/335/285	4	50.7	1500	3000/4500/6000	6000	0.4467

◆ Characteristic Curve

4018XE05-20　　4030XE07-30　　4037XE10-40　　4055XE15-60

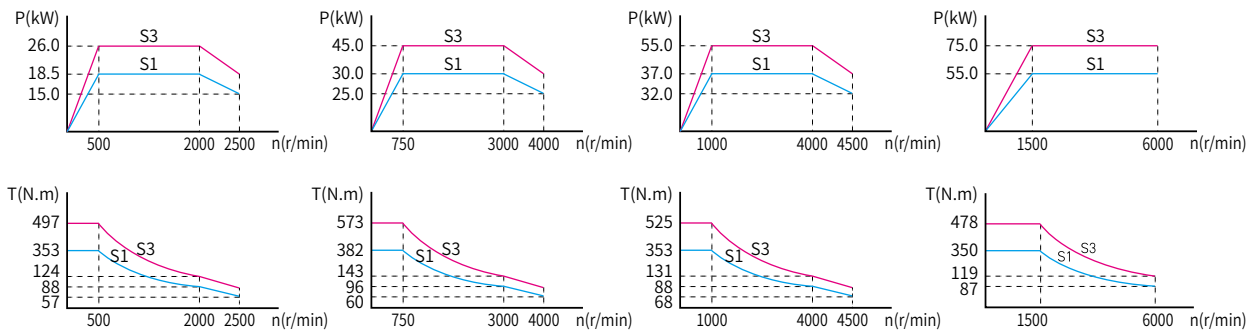

◆ Performance Index

ITEM	INDEX
Encoder (optional)	CE9-2500(Incremental)
	CE9-23B(Absolute)
	RZ12-1024(Resolver)
	SC-2048(SIN-COS)
	SC-128(SIN-COS)
	RE12-17bit(Absolute)
Shaft Type	G：Without Keyslot
	J：With Keyslot
Mounting Type	B3 B5 B35
Weight / Gross	353 (365) kg
Protection Class	IP55
Insulation Class	F Class
Rated Temperature Rise	90K
Vibration Class	A
Noise	≤70dB(A)
Environment	-15～45°C
Environment	≤95%RH

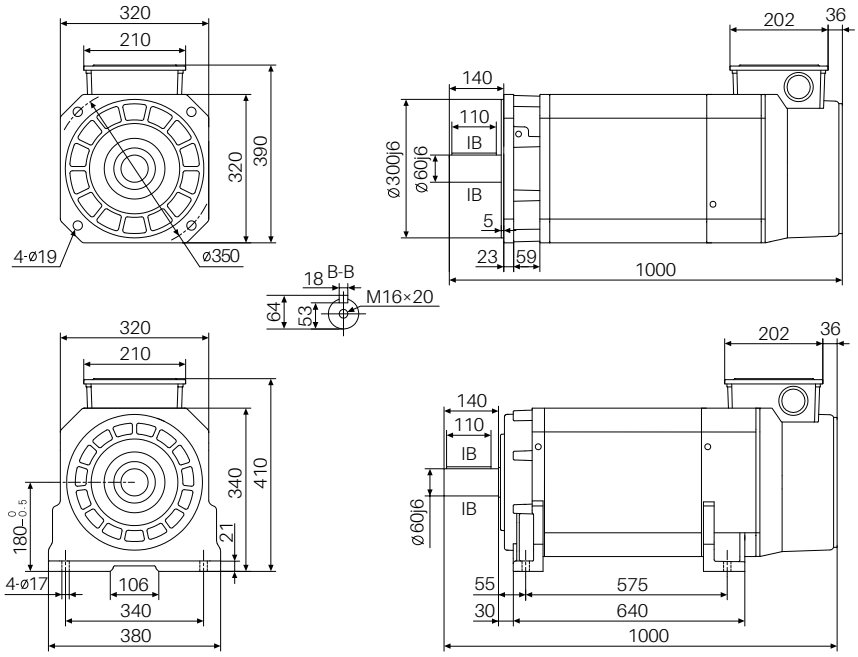

CTB超同步

Frame code：F1　Dimension：380×380×825 mm

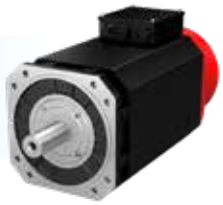

◆ Electrical Parameter

Voltage Class：400V　Connection：Δ　Fan Power：270W　Fan Voltage：380V　Fan Current：0.9A

Motor Model	Rated Power (KW)	Rated Current (A)	Rated Torque (N.m)	Rated Voltage (V)	Pole Number (P)	Rated Frequency (H)	Rated Speed (r/min)	Constant Power Max Speed (r/min)	Max Speed (r/min)	Rotational Inertia (KG.m2)
Z18-4015XF05-XXXX	15	28/28/31	287	380/375/340	4	17.3	500	1000/1500/2000	2500	0.4133
Z18-4022XF07-XXXX	22	40/41/45	280	380/375/335	4	25.6	750	1500/2000/3000	4000	0.4133
Z18-4030XF10-XXXX	30	53/54/60	287	380/375/335	4	34.0	1000	2000/3000/4000	4500	0.4133
Z18-4045XF15-XXXX	45	79/80/93	287	380/375/325	4	50.6	1500	3000/4500	4500	0.4133

◆ Characteristic Curve

4015XF05-20

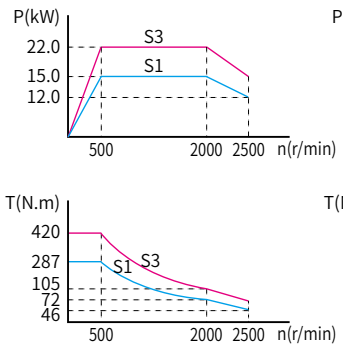

4022XF07-30

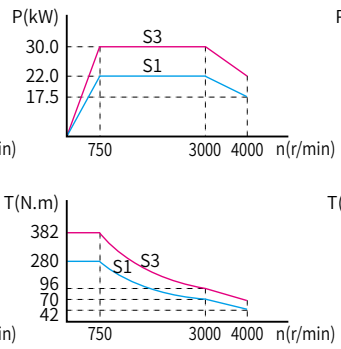

4030XF10-40

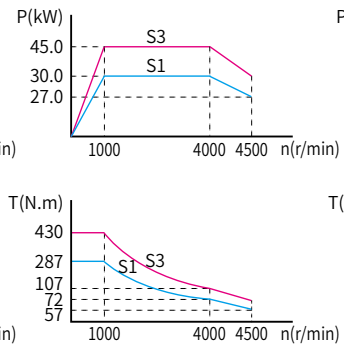

4045XF15-60

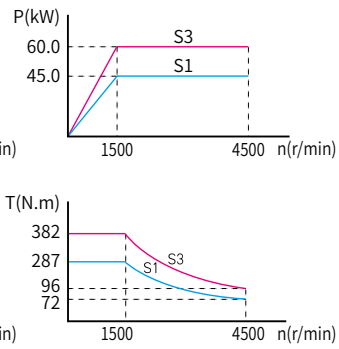

◆ Performance Index

ITEM	INDEX
Encoder (optional)	IGS04T08-256(Incremental)
	CE30-2500(Incremental)
	CE30-8192(Incremental)
	SC-256(SIN-COS)
	RZ30-1024(Rotary)
	RE12-17bit(Absolute)
Shaft Type	G：Without Keyslot
	J：With Keyslot
Mounting Type	B3 B5 B35
Weight / Gross	355 (367) kg
Protection Class	IP55
Insulation Class	F Class
Rated Temperature Rise	90K
Vibration Class	A
Noise	≤70dB(A)
Environment	-15～45°C
Environment	≤95%RH

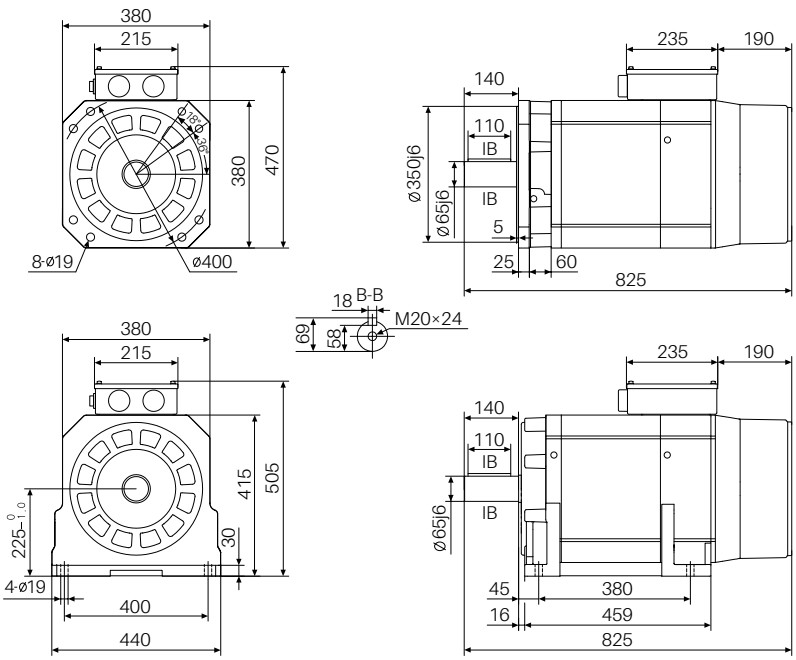

CTB超同步

Frame code：F2　Dimension：380×380×880 mm

◆ Electrical Parameter

Voltage Class：400V　Connection：Δ　Fan Power：270W　Fan Voltage：380V　Fan Current：0.9A

Motor Model	Rated Power (KW)	Rated Current (A)	Rated Torque (N.m)	Rated Voltage (V)	Pole Number (P)	Rated Frequency (H)	Rated Speed (r/min)	Constant Power Max Speed (r/min)	Max Speed (r/min)	Rotational Inertia (KG.m2)
Z18-4018XF05-XXX	18.5	34/35/38	353	380/375/340	4	17.3	500	1000/1500/2000	2500	0.4996
Z18-4030XF07-XXX	30	54/55/62	382	380/375/330	4	25.6	750	1500/2000/3000	4000	0.4996
Z18-4037XF10-XXX	37	66/67/74	353	380/375/335	4	33.9	1000	2000/3000/4000	4500	0.4996
Z18-4055XF15-XXX	55	97/98/111	350	380/375/330	4	50.6	1500	3000/4500	4500	0.4996

◆ Characteristic Curve

4018XF05-20　　4030XF07-30　　4037XF10-40　　4055XF15-60

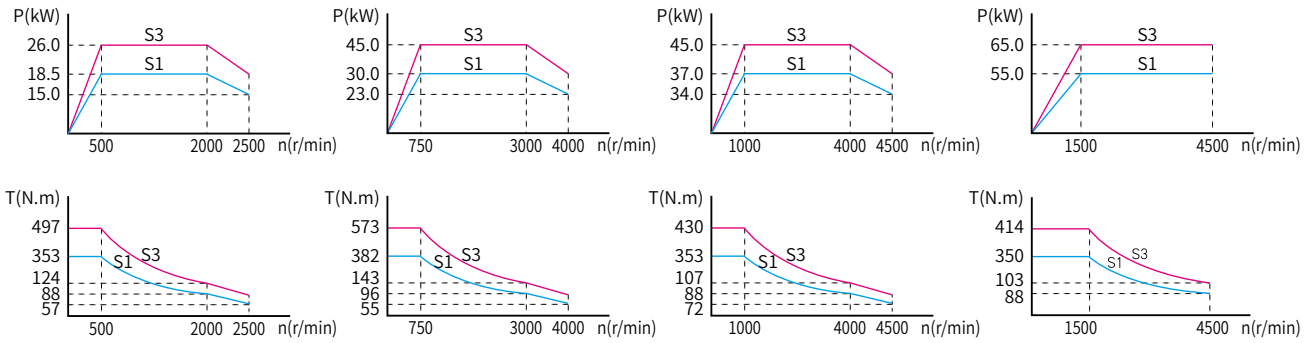

◆ Performance Index

ITEM	INDEX
Encoder (optional)	IGS04T08-256(Incremental)
	CE30-2500(Incremental)
	CE30-8192(Incremental)
	SC-256(SIN-COS)
	RZ30-1024(Rotary)
	RE12-17bit(Absolute)
Shaft Type	G：Without Keyslot
	J：With Keyslot
Mounting Type	B3 B5 B35
Weight / Gross	398 (413) kg
Protection Class	IP55
Insulation Class	F Class
Rated Temperature Rise	90K
Vibration Class	A
Noise	≤70dB(A)
Environment	-15～45°C
Environment	≤95%RH

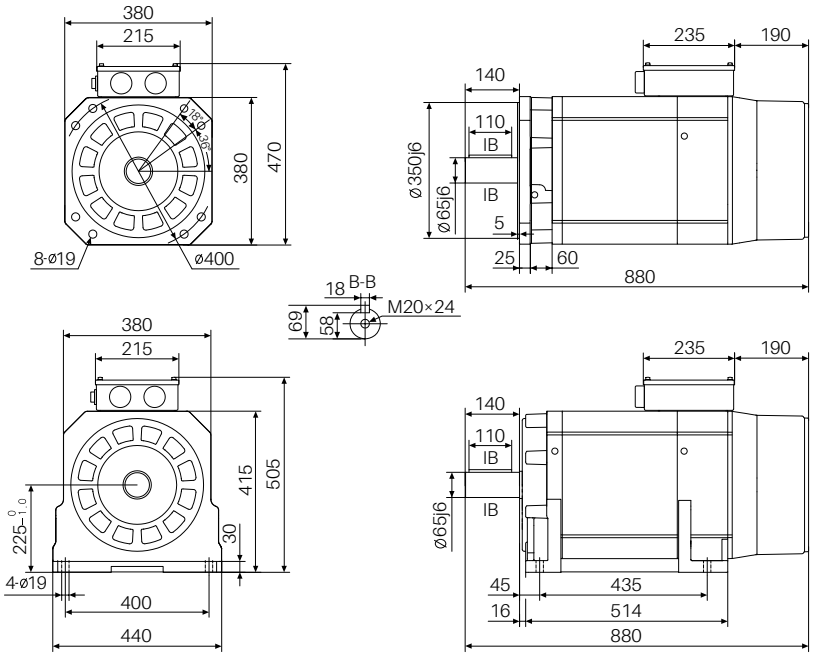

CTB超同步

Frame code：F3　Dimension：380×380×980 mm

◆ Electrical Parameter

Voltage Class：400V　Connection：Δ　Fan Power：270W　Fan Voltage：380V　Fan Current：0.9A

Motor Model	Rated Power (KW)	Rated Current (A)	Rated Torque (N.m)	Rated Voltage (V)	Pole Number (P)	Rated Frequency (H)	Rated Speed (r/min)	Constant Power Max Speed (r/min)	Max Speed (r/min)	Rotational Inertia (KG.m2)
Z18-4026XF05-XXXX	26	47/48/55	497	380/375/330	4	17.3	500	1000/1500/2000	2500	0.6565
Z18-4037XF07-XXXX	37	66/66/75	471	380/375/335	4	25.6	750	1500/2000/3000	4000	0.6565
Z18-4050XF10-XXXX	50	88/89/99	478	380/375/340	4	33.9	1000	2000/3000/4000	4500	0.6565
Z18-4075XF15-XXXX	75	131/133/146	478	380/375/340	4	50.6	1500	3000/4500	4500	0.6565

◆ Characteristic Curve

4026XF05-20　　4037XF07-30　　4050XF10-40　　4075XF15-60

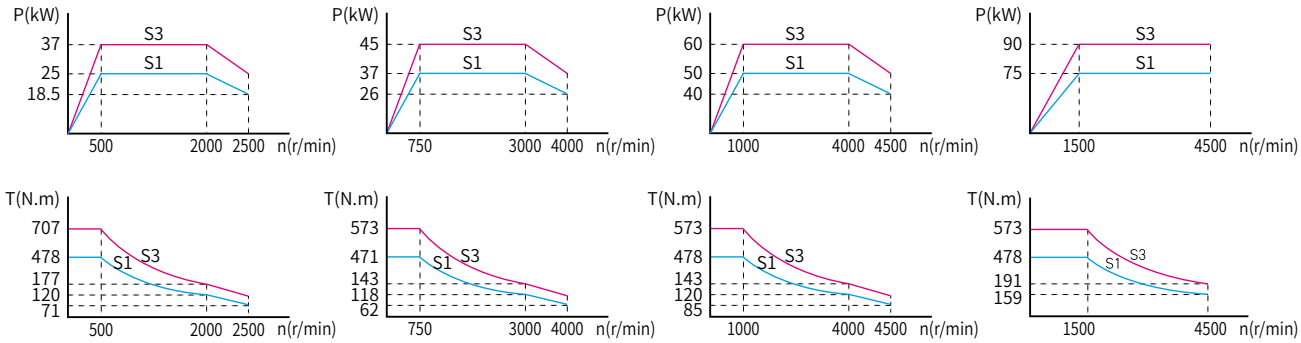

◆ Performance Index

ITEM	INDEX
Encoder (optional)	IGS04T08-256(Incremental)
	CE30-2500(Incremental)
	CE30-8192(Incremental)
	SC-256(SIN-COS)
	RZ30-1024(Rotary)
	RE12-17bit(Absolute)
Shaft Type	G：Without Keyslot
	J：With Keyslot
Mounting Type	B3 B5 B35
Weight / Gross	478 (493) kg
Protection Class	IP55
Insulation Class	F Class
Rated Temperature Rise	90K
Vibration Class	A
Noise	≤70dB(A)
Environment	-15～45°C
Environment	≤95%RH

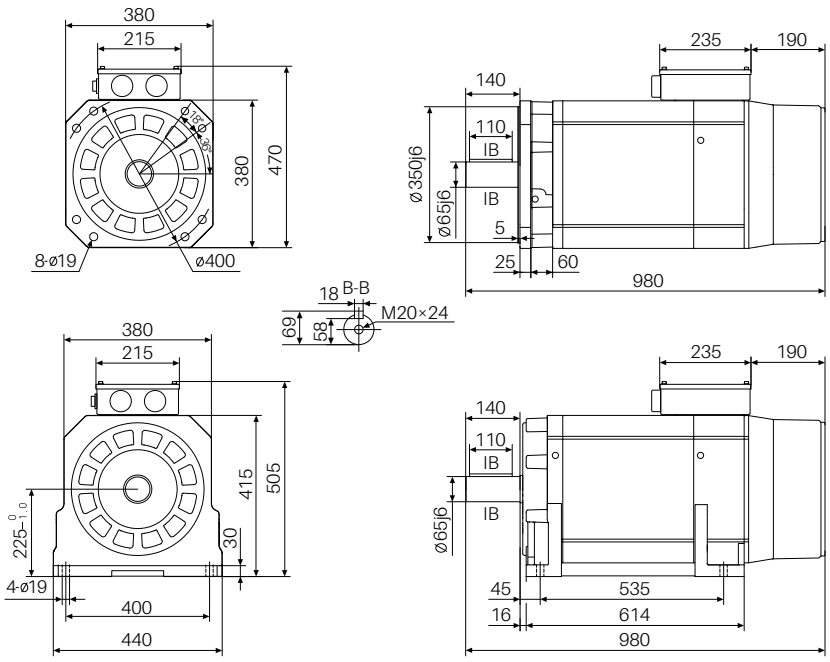

CTB超同步

Frame code：F4　Dimension：380×380×1060 mm

◆ Electrical Parameter

Voltage Class：400V　Connection：Δ　Fan Power：270W　Fan Voltage：380V　Fan Current：0.9A

Motor Model	Rated Power (KW)	Rated Current (A)	Rated Torque (N.m)	Rated Voltage (V)	Pole Number (P)	Rated Frequency (H)	Rated Speed (r/min)	Constant Power Max Speed (r/min)	Max Speed (r/min)	Rotational Inertia (KG.m2)
Z18-4030XF05-XXXX	30	54/55/61	573	380/375/340	4	17.2	500	1000/1500/2000	2500	0.7820
Z18-4045XF07-XXXX	45	80/80/92	573	380/375/330	4	25.6	750	1500/2000/3000	4000	0.7820
Z18-4060XF10-XXXX	60	106/107/122	573	380/375/330	4	33.9	1000	2000/3000/4000	4500	0.7820
Z18-4090XF15-XXXX	90	157/159/175	573	380/375/340	4	50.6	1500	3000/4500	4500	0.7820

◆ Characteristic Curve

4030XF05-20

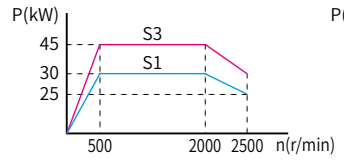

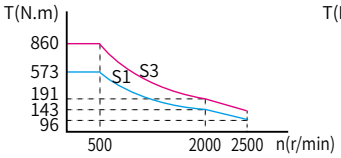

4045XF07-30

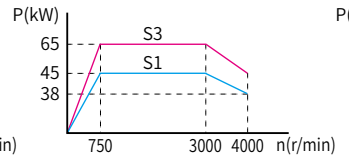

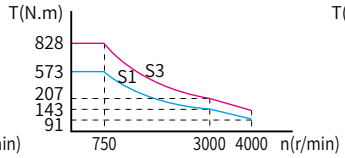

4060XF10-40

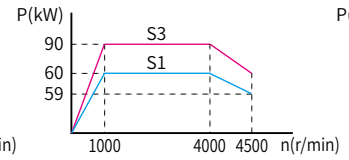

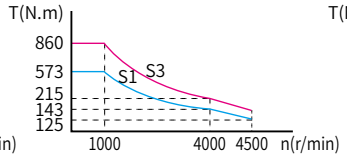

4090XF15-60

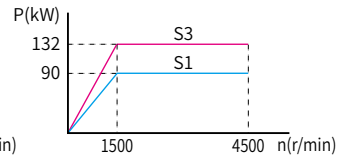

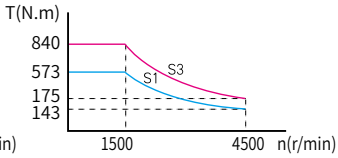

◆ Performance Index

ITEM	INDEX
Encoder (optional)	IGS04T08-256(Incremental)
	CE30-2500(Incremental)
	CE30-8192(Incremental)
	SC-256(SIN-COS)
	RZ30-1024(Rotary)
	RE12-17bit(Absolute)
Shaft Type	G：Without Keyslot
	J：With Keyslot
Mounting Type	B3 B5 B35
Weight / Gross	542 (557) kg
Protection Class	IP55
Insulation Class	F Class
Rated Temperature Rise	90K
Vibration Class	A
Noise	≤70dB(A)
Environment	-15～45°C
Environment	≤95%RH

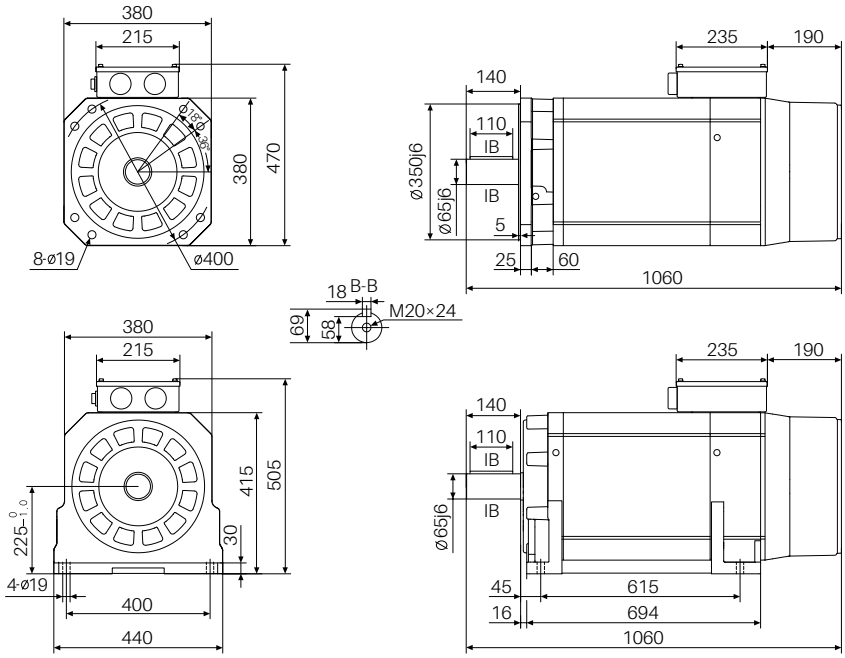

CTB超同步

Frame code：G1　Dimension：480×480×910 mm

◆ Electrical Parameter

Voltage Class：400V　Connection：Δ　Fan Power：310W　Fan Voltage：380V　Fan Current：1.0A

Motor Model	Rated Power (KW)	Rated Current (A)	Rated Torque (N.m)	Rated Voltage (V)	Pole Number (P)	Rated Frequency (H)	Rated Speed (r/min)	Constant Power Max Speed (r/min)	Max Speed (r/min)	Rotational Inertia (KG.m2)
Z18-4030XG05-XXXX	30	55/56/61	573	380/375/345	6	25.5	500	1000/1500/2000	2500	1.813
Z18-4045XG07-XXXX	45	81/82/92	573	380/375/335	6	38.0	750	1500/2000/3000	4000	1.813
Z18-4060XG10-XXXX	60	106/107/122	573	380/375/335	6	50.5	1000	2000/3000/4000	4500	1.813
Z18-4090XG15-XXXX	90	158/160	573	380/375	6	75.5	1500	3000/4500	4500	1.813

◆ Characteristic Curve

4030XG05-20　　4045XG07-30　　4060XG10-40　　4090XG15-45

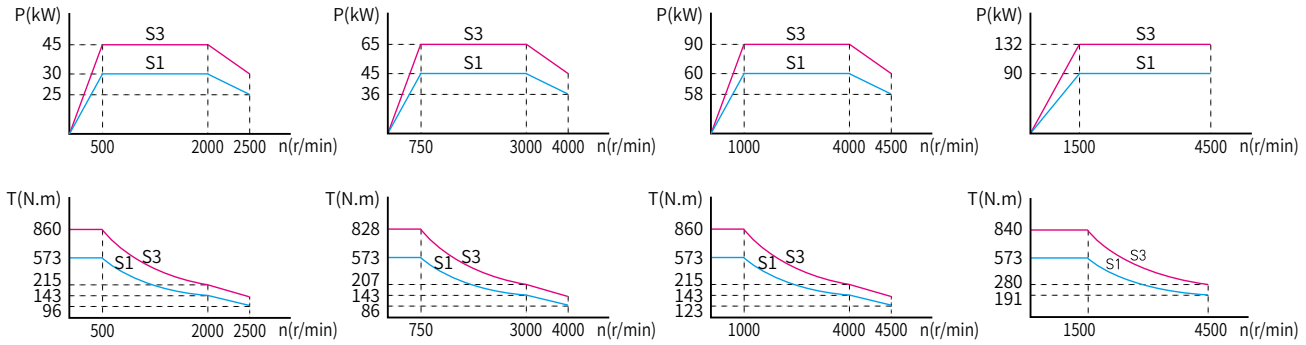

◆ Performance Index

ITEM	INDEX
Encoder (optional)	IGS04T08-256(Incremental)
	CE30-2500(Incremental)
	CE30-8192(Incremental)
	SC-256(SIN-COS)
	RZ30-1024(Rotary)
	RE12-17bit(Absolute)
Shaft Type	G：Without Keyslot
	J：With Keyslot
Mounting Type	B3 B5 B35
Weight / Gross	566 (586) kg
Protection Class	IP55
Insulation Class	F Class
Rated Temperature Rise	90K
Vibration Class	A
Noise	≤70dB(A)
Environment	-15～45°C
Environment	≤95%RH

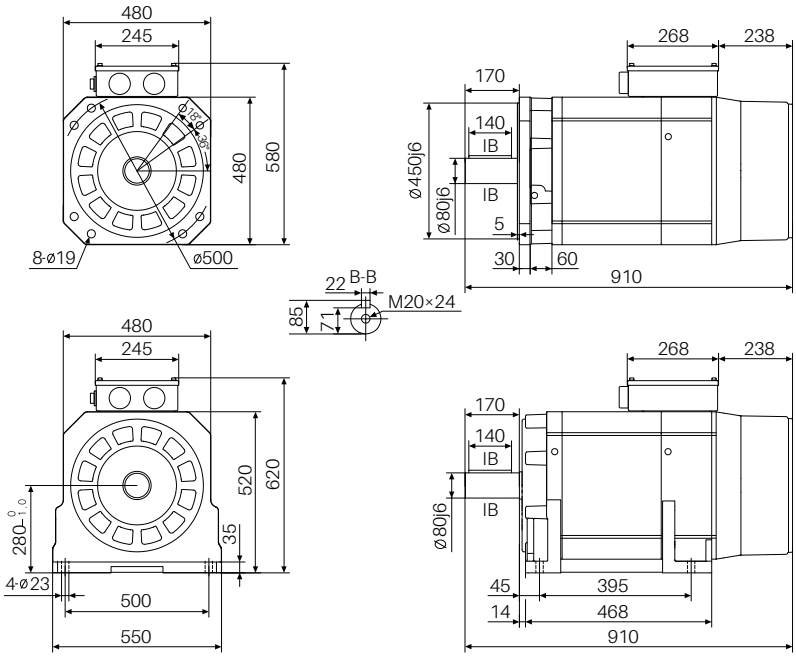

CTB超同步

Frame code：G2　Dimension：480×480×970 mm

◆ Electrical Parameter

Voltage Class：400V　Connection：Δ　Fan Power：310W　Fan Voltage：380V　Fan Current：1.0A

Motor Model	Rated Power (KW)	Rated Current (A)	Rated Torque (N.m)	Rated Voltage (V)	Pole Number (P)	Rated Frequency (H)	Rated Speed (r/min)	Constant Power Max Speed (r/min)	Max Speed (r/min)	Rotational Inertia (KG.m2)
Z18-4037XG05-XXXX	37	67/68/73	707	380/375/350	6	25.5	500	1000/1500/2000	2500	2.063
Z18-4055XG07-XXXX	55	98/99/108	700	380/375/345	6	38.0	750	1500/2000/3000	4000	2.063
Z18-4075XG10-XXXX	75	132/133/147	716	380/375/345	6	50.5	1000	2000/3000/4000	4500	2.063
Z18-4110XG15-XXXX	110	195/197	700	380/375	6	75.5	1500	3000/4500	4500	2.063

◆ Characteristic Curve

4037XG05-20　　4055XG07-30　　4075XG10-40　　4110XG15-45

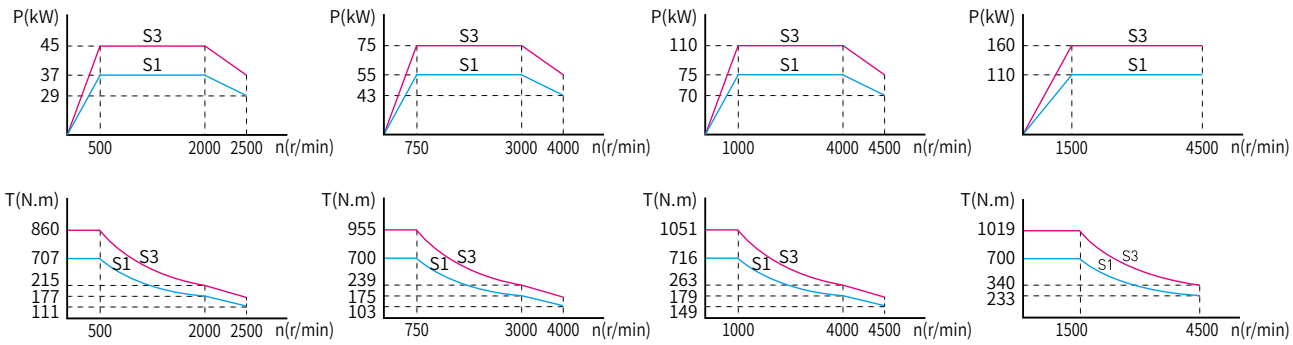

◆ Performance Index

ITEM	INDEX
Encoder (optional)	IGS04T08-256(Incremental)
	CE30-2500(Incremental)
	CE30-8192(Incremental)
	SC-256(SIN-COS)
	RZ30-1024(Rotary)
	RE12-17bit(Absolute)
Shaft Type	G：Without Keyslot
	J：With Keyslot
Mounting Type	B3 B5 B35
Weight / Gross	642 (662) kg
Protection Class	IP55
Insulation Class	F Class
Rated Temperature Rise	90K
Vibration Class	A
Noise	≤70dB(A)
Environment	-15～45°C
Environment	≤95%RH

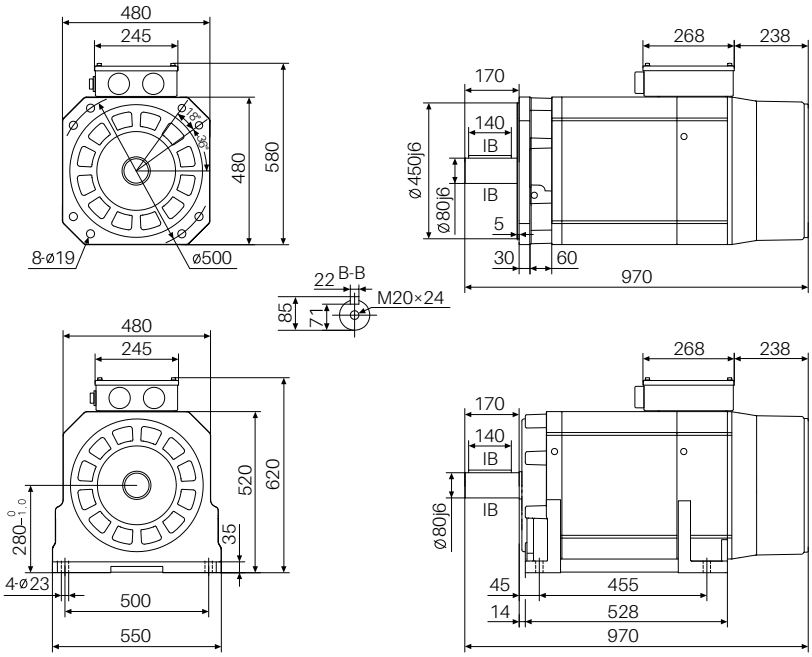

CTB超同步

Frame code：G3　Dimension：480×480×1050 mm

◆ Electrical Parameter

Voltage Class：400V　Connection：Δ　Fan Power：310W　Fan Voltage：380V　Fan Current：1.0A

Motor Model	Rated Power (KW)	Rated Current (A)	Rated Torque (N.m)	Rated Voltage (V)	Pole Number (P)	Rated Frequency (H)	Rated Speed (r/min)	Constant Power Max Speed (r/min)	Max Speed (r/min)	Rotational Inertia (KG.m2)
Z18-4045XG05-XXXX	45	82/82/88	860	380/375/350	6	25.5	500	1000/1500/2000	2500	2.555
Z18-4066XG07-XXXX	66	117/118/130	840	380/375/345	6	38.0	750	1500/2000/3000	4000	2.555
Z18-4090XG10-XXXX	90	161/162/176	860	380/375/345	6	50.5	1000	2000/3000/4000	4500	2.555
Z18-4132XG15-XXXX	132	232/234	840	380/375	6	75.5	1500	3000/4500	4500	2.555

◆ Characteristic Curve

4045XG05-20

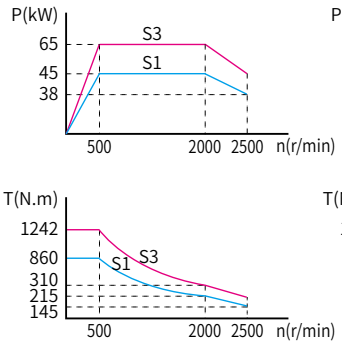

4066XG07-30

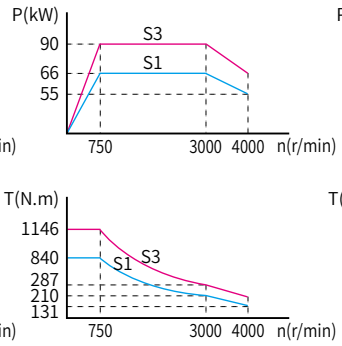

4090XG10-40

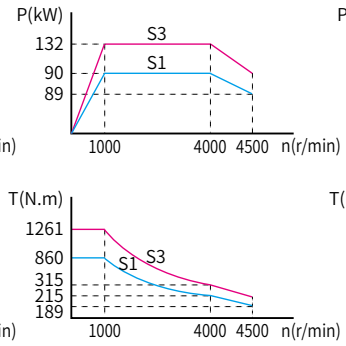

4132XG15-45

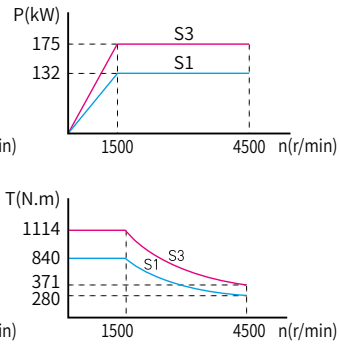

◆ Performance Index

ITEM	INDEX
Encoder (optional)	IGS04T08-256(Incremental)
	CE30-2500(Incremental)
	CE30-8192(Incremental)
	SC-256(SIN-COS)
	RZ30-1024(Rotary)
	RE12-17bit(Absolute)
Shaft Type	G：Without Keyslot
	J：With Keyslot
Mounting Type	B3 B5 B35
Weight / Gross	735 (755) kg
Protection Class	IP55
Insulation Class	F Class
Rated Temperature Rise	90K
Vibration Class	A
Noise	≤70dB(A)
Environment	-15～45°C
Environment	≤95%RH

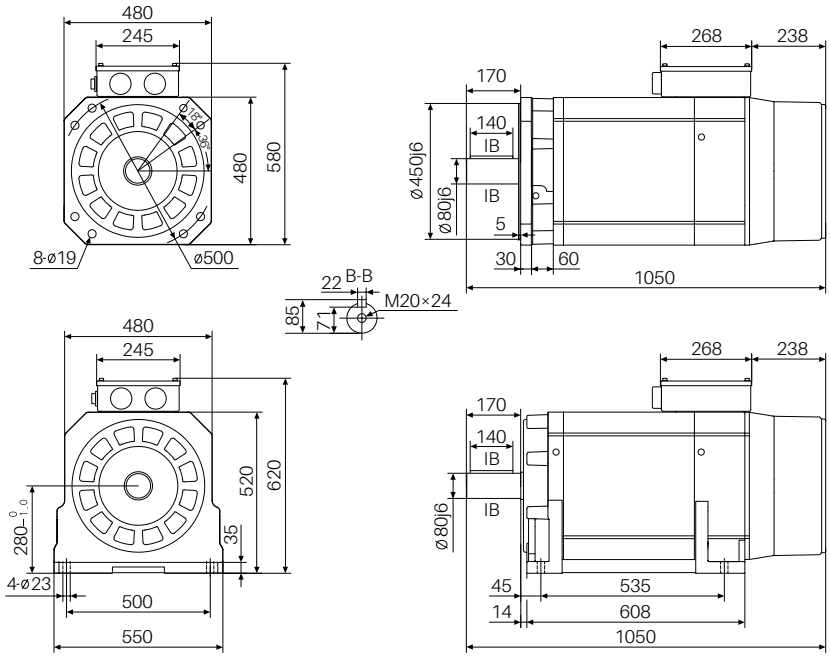

CTB超同步

Frame code：G4　Dimension：480×480×1160 mm

◆ Electrical Parameter

Voltage Class：400V　Connection：Δ　Fan Power：310W　Fan Voltage：380V　Fan Current：1.0A

Motor Model	Rated Power (KW)	Rated Current (A)	Rated Torque (N.m)	Rated Voltage (V)	Pole Number (P)	Rated Frequency (H)	Rated Speed (r/min)	Constant Power Max Speed (r/min)	Max Speed (r/min)	Rotational Inertia (KG.m2)
Z18-4055XG05-XXXX	55	99/100/107	1051	380/375/355	6	25.5	500	1000/1500/2000	2500	3.232
Z18-4090XG07-XXXX	90	159/160/184	1146	380/375/330	6	38.0	750	1500/2000/3000	4000	3.232
Z18-4110XG10-XXXX	110	192/194/205	1051	380/375/360	6	50.5	1000	2000/3000/4000	4500	3.232
Z18-4160XG15-XXXX	160	284/286	1019	380/375	6	75.5	1500	3000/4500	4500	3.232

◆ Characteristic Curve

4055XG05-20　　4090XG07-30　　4110XG10-40　　4160XG15-45

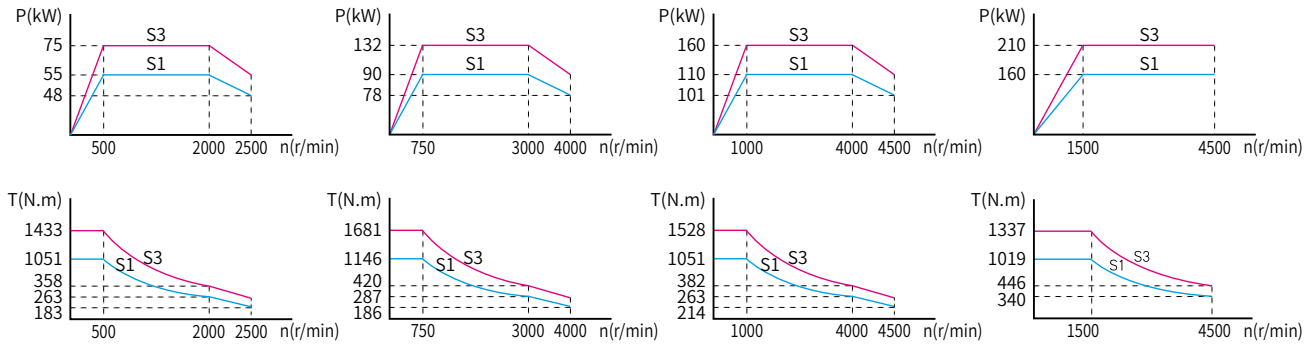

◆ Performance Index

ITEM	INDEX
Encoder (optional)	IGS04T08-256(Incremental)
	CE30-2500(Incremental)
	CE30-8192(Incremental)
	SC-256(SIN-COS)
	RZ30-1024(Rotary)
	RE12-17bit(Absolute)
Shaft Type	G：Without Keyslot
	J：With Keyslot
Mounting Type	B3 B5 B35
Weight / Gross	877 (897) kg
Protection Class	IP55
Insulation Class	F Class
Rated Temperature Rise	90K
Vibration Class	A
Noise	≤70dB(A)
Environment	-15～45°C
Environment	≤95%RH

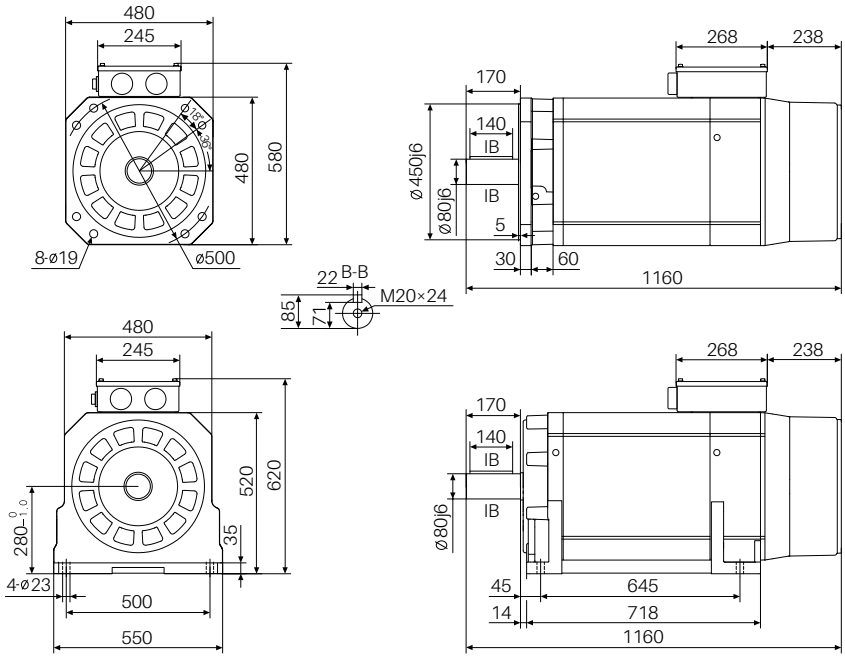

CTB超同步

Frame code：H1　Dimension：580×580×995 mm

◆ Electrical Parameter

Voltage Class：400V　Connection：Δ　Fan Power：450W　Fan Voltage：380V　Fan Current：1.3A

Motor Model	Rated Power (KW)	Rated Current (A)	Rated Torque (N.m)	Rated Voltage (V)	Pole Number (P)	Rated Frequency (H)	Rated Speed (r/min)	Constant Power Max Speed (r/min)	Max Speed (r/min)	Rotational Inertia (KG.m2)
Z18-4065XH05-XXXX	65	124/141/164	1242	380/335/285	8	33.7	500	1000/1500/2000	2500	5.206
Z18-4090XH07-XXXX	90	168/191/224	1146	380/340/290	8	50.4	750	1500/2000/3000	3000	5.206
Z18-4132XH10-XXXX	132	245/295	1261	380/320	8	67.1	1000	2000/3000	3000	5.206
Z18-4200XH15-XXXX	200	378	1273	380	8	100.5	1500	3000	3000	5.206

◆ Characteristic Curve

4065XH05-20　4090XH07-30　4132XH10-30　4200XH15-30

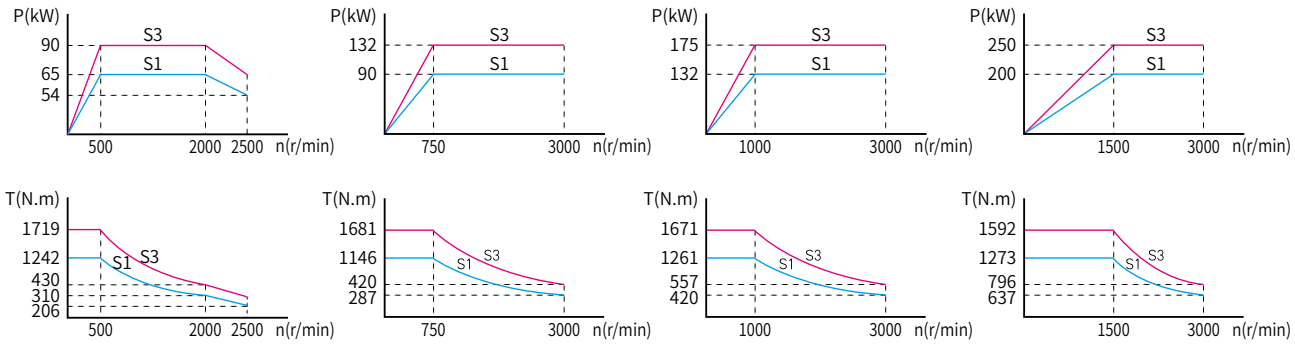

◆ Performance Index

ITEM	INDEX
Encoder (optional)	IGS04T08-256(Incremental)
	CE30-2500(Incremental)
	CE30-8192(Incremental)
	SC-256(SIN-COS)
	RZ30-1024(Rotary)
	RE12-17bit(Absolute)
Shaft Type	G：Without Keyslot
	J：With Keyslot
Mounting Type	B3 B5 B35
Weight / Gross	942 (967) kg
Protection Class	IP55
Insulation Class	F Class
Rated Temperature Rise	90K
Vibration Class	A
Noise	≤70dB(A)
Environment	-15～45°C
Environment	≤95%RH

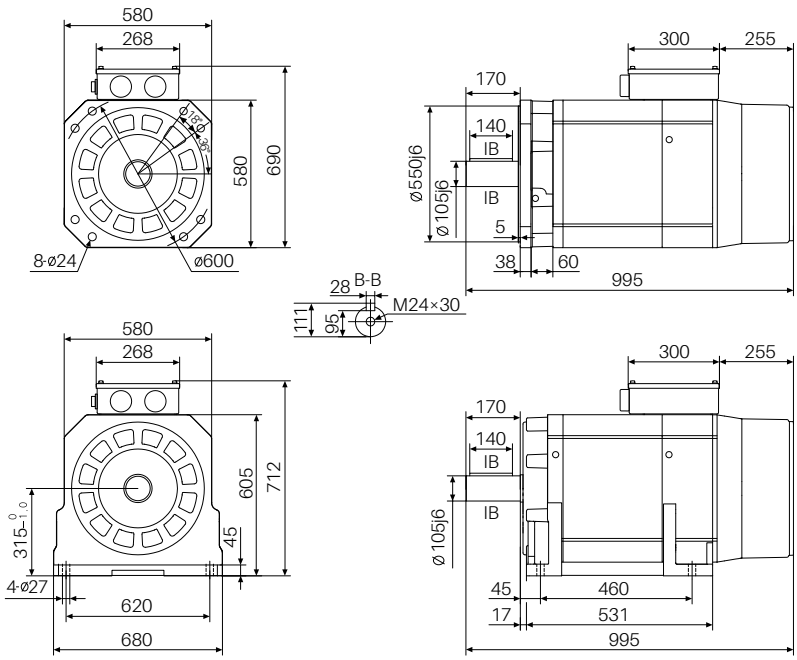

CTB超同步

Frame code：H2　Dimension：580×580×1095 mm

◆ Electrical Parameter

Voltage Class：400V　Connection：Δ　Fan Power：450W　Fan Voltage：380V　Fan Current：1.3A

Motor Model	Rated Power (KW)	Rated Current (A)	Rated Torque (N.m)	Rated Voltage (V)	Pole Number (P)	Rated Frequency (H)	Rated Speed (r/min)	Constant Power Max Speed (r/min)	Max Speed (r/min)	Rotational Inertia (KG.m2)
Z18-4090XH05-XXXX	90	170/202/223	1719	380/320/290	8	33.7	500	1000/1500/2000	2500	6.804
Z18-4132XH07-XXXX	132	246/295/344	1681	380/320/275	8	50.4	750	1500/2000/3000	3000	6.804
Z18-4160XH10-XXXX	160	298/346	1528	380/335	8	67.1	1000	2000/3000	3000	6.804
Z18-4250XH15-XXXX	250	455	1592	380	8	100.5	1500	3000	3000	6.804

◆ Characteristic Curve

4090XH05-20

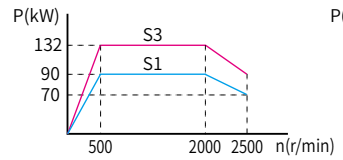

4132XH07-30

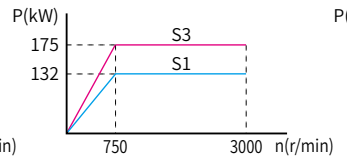

4160XH10-30

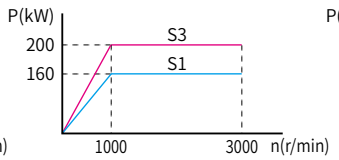

4250XH15-30

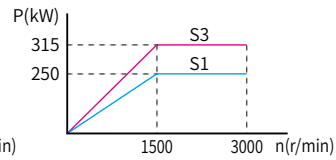

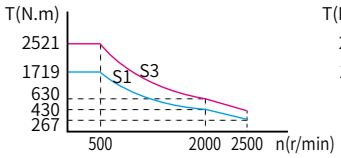

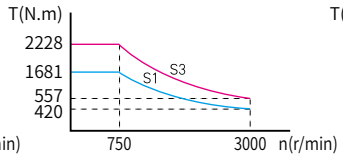

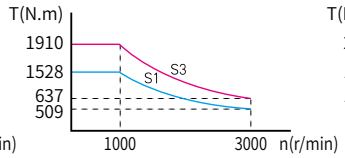

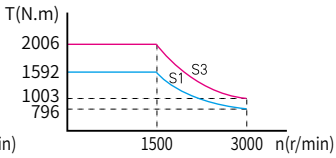

◆ Performance Index

ITEM	INDEX
Encoder (optional)	IGS04T08-256(Incremental)
	CE30-2500(Incremental)
	CE30-8192(Incremental)
	SC-256(SIN-COS)
	RZ30-1024(Rotary)
	RE12-17bit(Absolute)
Shaft Type	G：Without Keyslot
	J：With Keyslot
Mounting Type	B3 B5 B35
Weight / Gross	1119 (1144) kg
Protection Class	IP55
Insulation Class	F Class
Rated Temperature Rise	90K
Vibration Class	A
Noise	≤70dB(A)
Environment	-15～45°C
Environment	≤95%RH

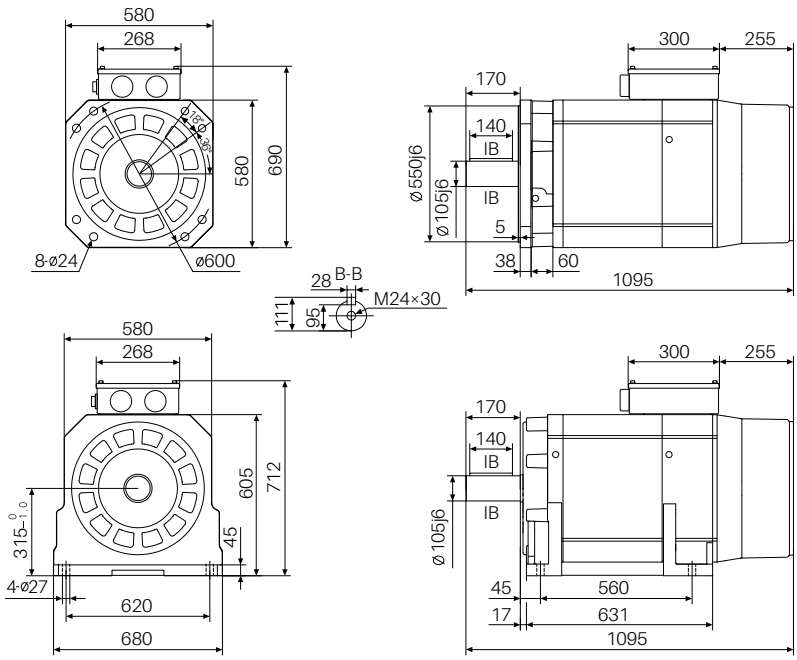

CTB超同步

Frame code：H3　Dimension：580×580×1195 mm

◆ Electrical Parameter

Voltage Class：400V　Connection：Δ　Fan Power：450W　Fan Voltage：380V　Fan Current：1.3A

Motor Model	Rated Power (KW)	Rated Current (A)	Rated Torque (N.m)	Rated Voltage (V)	Pole Number (P)	Rated Frequency (H)	Rated Speed (r/min)	Constant Power Max Speed (r/min)	Max Speed (r/min)	Rotational Inertia (KG.m2)
Z18-4110XH05-XXXX	110	208/245/277	2101	380/320/285	8	33.7	500	1000/1500/2000	2500	8.402
Z18-4160XH07-XXXX	160	295/336/405	2037	380/340/280	8	50.4	750	1500/2000/3000	3000	8.402
Z18-4210XH10-XXXX	210	397/442	2006	380/340	8	67.1	1000	2000/3000	3000	8.402
Z18-4315XH15-XXXX	315	579	2006	380	8	100.5	1500	3000	3000	8.402

◆ Characteristic Curve

4110XH05-20　4160XH07-30　4210XH10-30　4315XH15-30

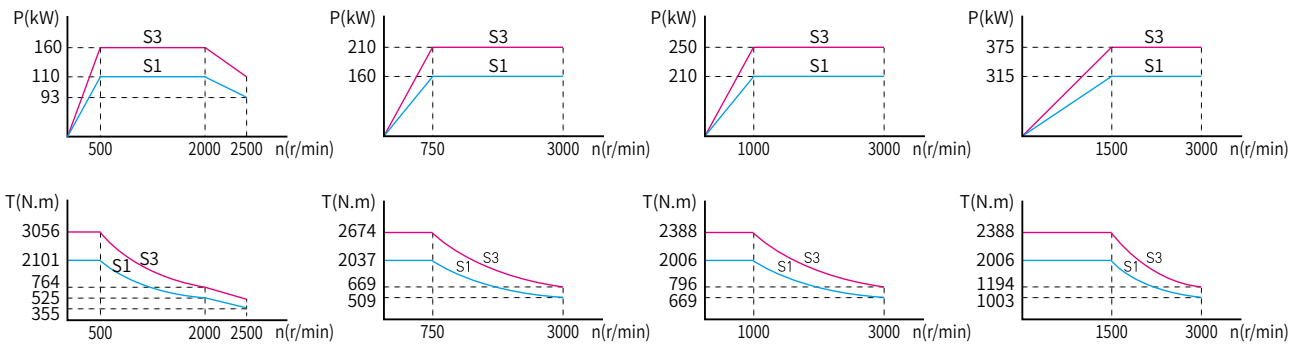

◆ Performance Index

ITEM	INDEX
Encoder (optional)	IGS04T08-256(Incremental)
	CE30-2500(Incremental)
	CE30-8192(Incremental)
	SC-256(SIN-COS)
	RZ30-1024(Rotary)
	RE12-17bit(Absolute)
Shaft Type	G：Without Keyslot
	J：With Keyslot
Mounting Type	B3 B5 B35
Weight / Gross	1300 (1330) kg
Protection Class	IP55
Insulation Class	F Class
Rated Temperature Rise	90K
Vibration Class	A
Noise	≤70dB(A)
Environment	-15～45°C
Environment	≤95%RH

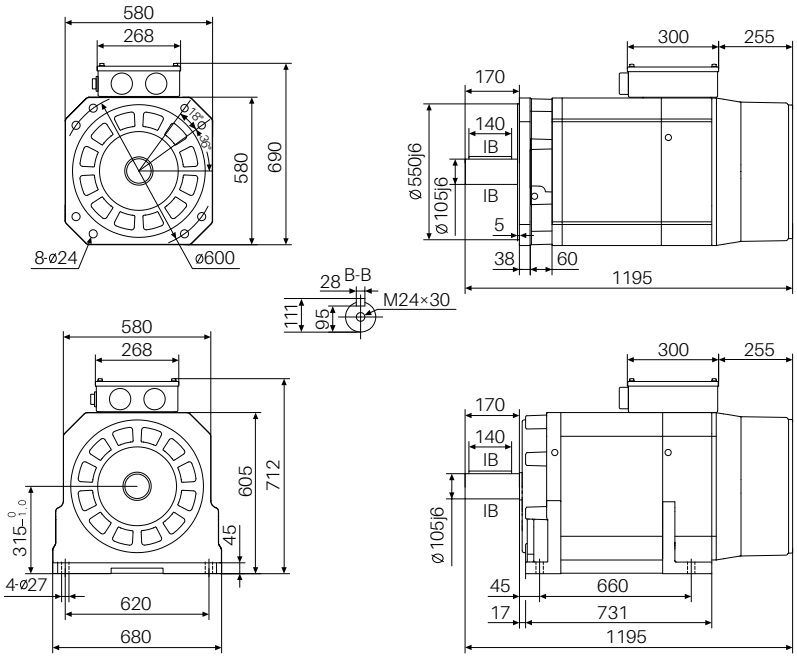

CTB超同步

Frame code：H4　Dimension：580×580×1375 mm

◆ Electrical Parameter

Voltage Class：400V　Connection：Δ　Fan Power：450W　Fan Voltage：380V　Fan Current：1.3A

Motor Model	Rated Power (KW)	Rated Current (A)	Rated Torque (N.m)	Rated Voltage (V)	Pole Number (P)	Rated Frequency (H)	Rated Speed (r/min)	Constant Power Max Speed (r/min)	Max Speed (r/min)	Rotational Inertia (KG.m2)
Z18-4132XH05-XXXX	132	250/267/312	2521	380/360/305	8	33.7	500	1000/1500/2000	2500	11.278
Z18-4200XH07-XXXX	200	378/421/472	2547	380/340/305	8	50.3	750	1500/2000/3000	3000	11.278
Z18-4265XH10-XXXX	265	485/539	2531	380/350	8	67.1	1000	2000/3000	3000	11.278
Z18-4400XH15-XXXX	400	754	2547	380	8	100.4	1500	3000	3000	11.278

◆ Characteristic Curve

4132XH05-20

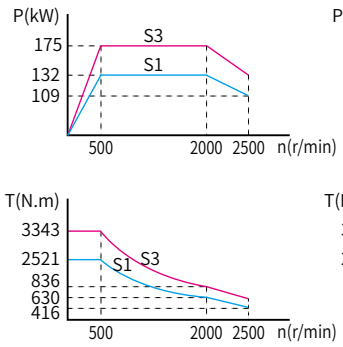

4200XH07-30

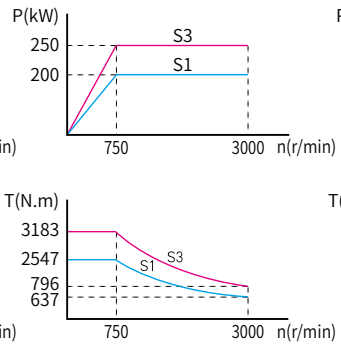

4265XH10-30

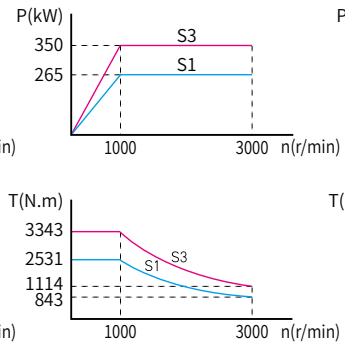

4400XH15-30

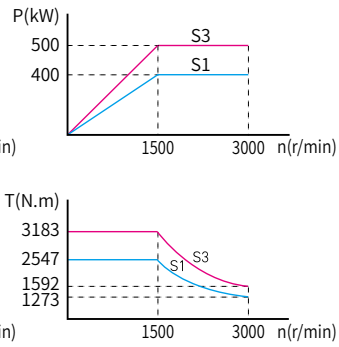

◆ Performance Index

ITEM	INDEX
Encoder (optional)	IGS04T08-256(Incremental)
	CE30-2500(Incremental)
	CE30-8192(Incremental)
	SC-256(SIN-COS)
	RZ30-1024(Rotary)
	RE12-17bit(Absolute)
Shaft Type	G：Without Keyslot
	J：With Keyslot
Mounting Type	B3 B5 B35
Weight / Gross	1622 (1652) kg
Protection Class	IP55
Insulation Class	F Class
Rated Temperature Rise	90K
Vibration Class	A
Noise	≤70dB(A)
Environment	-15～45°C
Environment	≤95%RH

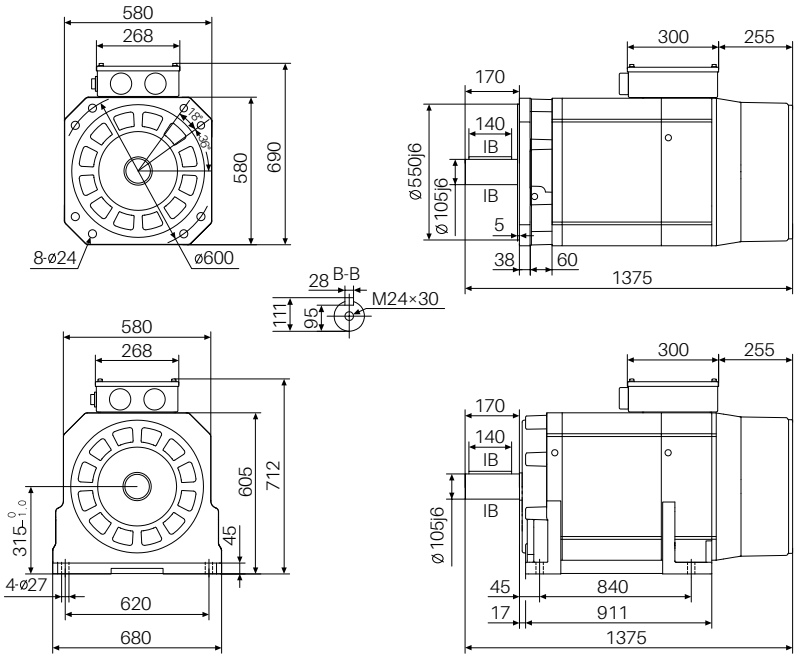

◆ Vertical lathe's coordinate axis servo drive solution

CTB high power servo motor can supply power for coordinate axis drive of heavy duty machine tools such as single column vertical lathe, double column vertical lathe, heavy duty horizontal lathe, gantry machine tool, floor type boring and milling machine.etc, which can make the coordinate axis drive of heavy duty machine tools to realize their servo and automation control.

◇ Manual independent operation coordinated with CTB servo drive can achieve hand wheel control, single shaft locating, operation monitoring;

◇ Interface with various CNC control system to complete interpolation control and make machine tool numerical controlled;

◇ Ultra-low speed feed, operate smoothly, strong overload capacity;

◇ Rapid traverse with high speed,utilize constant power feature of the motor to achieve high-speed rapid traverse.

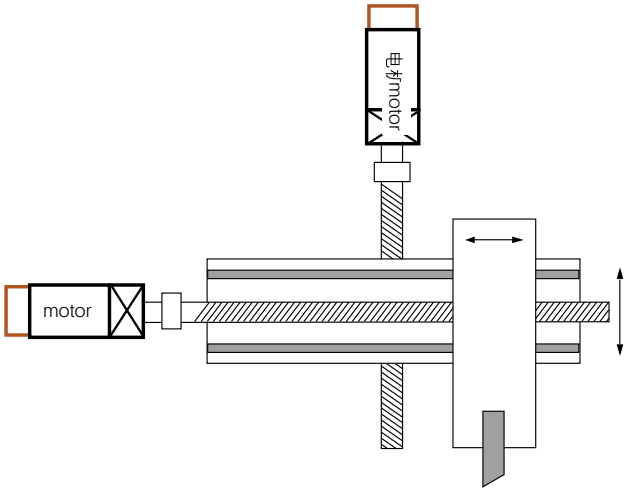

◆ Planer milling machine working table drive solutions

CTB high power servo motor with high control performance applied to working table drive of planer milling machine, which has greatly improved work efficiency and performance of planer milling machine, can completely replace DC motor, switch reluctance motor, variable-frequency and speed motor.

◇ Simple and reliable settings of work table travel via parameter to minimize idle stroke and improve working efficiency of planer milling machine;

◇ Smooth start and reversing, avoid mechanical shock, reduce equipment failure rate;

◇ Easy to interface with different CNC control system and realize the functions of planer milling machine.

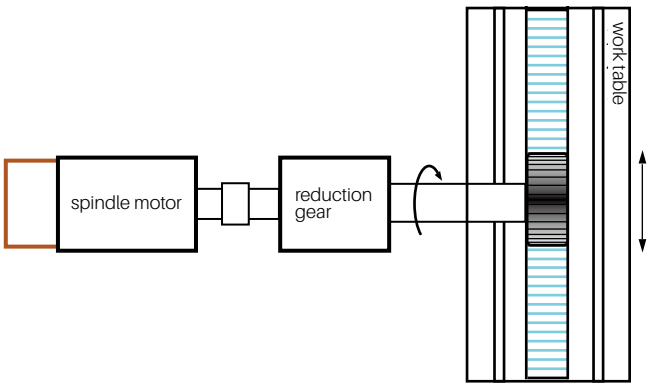

◆ Using the low speed motor without reduction gear

As CTB's low speed motor can drive machine tool spindle directly, so the reduction gear with the speed ratio within 1:10 can no longer be needed, as a result, the spindle mechanical drive can easily be achieved and has low noise; meanwhile, production cost and machinery failure rate go down.
Can be widely used in spindle drive of floor type boring and milling machine, heavy duty horizontal lathe, vertical lathe, planer milling machine etc.

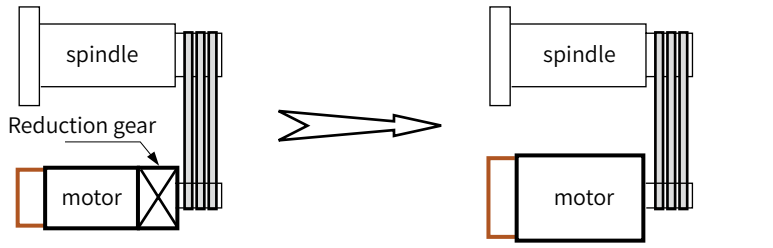

Reduction gear structure Direct connection structure

◆ Using the AC spindle motor for the substitute of DC motor

CTB's high-power AC spindle motor can replace traditional DC motor and can be widely used in spindle drive of floor type boring and milling machine, heavy duty horizontal lathe, vertical lathe, planer milling machine, etc.

◇ Smaller volume compared with same power DC motor, easy installation;
◇ Wide range of speed and constant power speed;
◇ Low running noise, free maintenance.

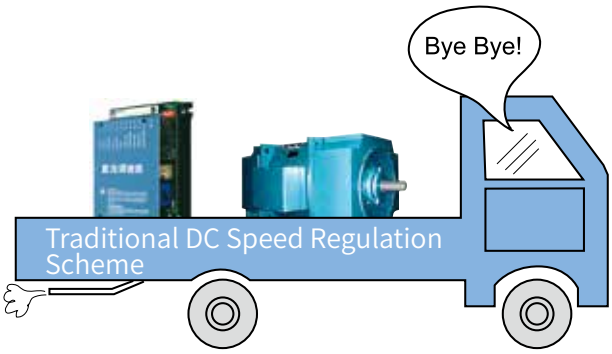

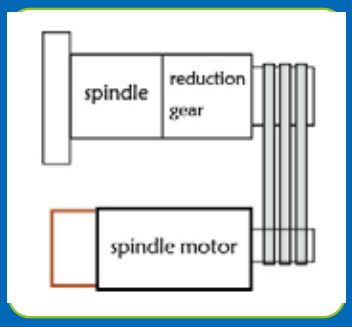

◆ Installation figure(suitable for vertical machining center)

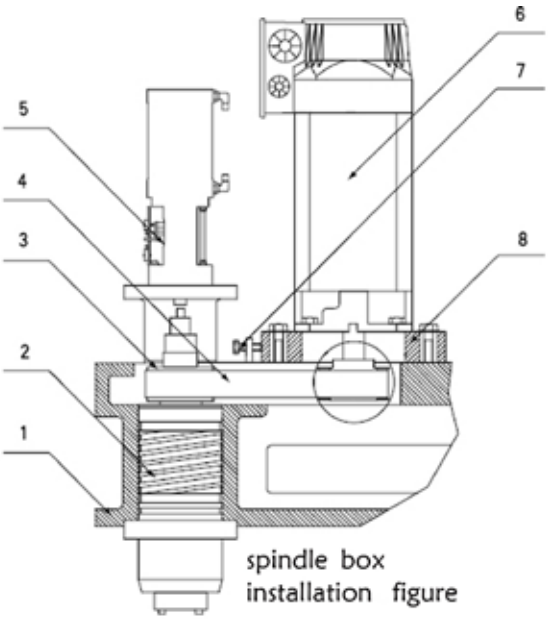

spindle box installation figure

1. spindle box
2. spindle
3. synchronous pulley
4. synchronous belt
5. pressurizing cylinder
6. spindle motor
7. adjusting screw
8. mounting plate
9. synchronous pulley
10. gland
11. taper-lock
12. compression screw
13. motor shaft

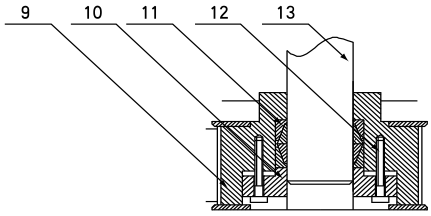

spindle motor pulley installation figure

The formulas below describe the relationship between Power(P), Torque(T) and Speed(n) of spindle motor:

$P=n\times T/9550$(kW)

$T=P\times 9550/n$(N·m)

$n=P\times 9550/T$(r/min)

◆ Application area

Widely used in digit control machine tool. Woodworking machine, textile machinery, printing equipment, dyeing and finishing equipment. Papermaking equipment...

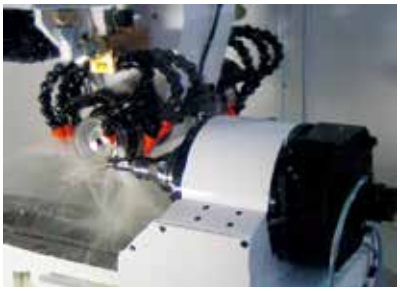

STRIVE FOR CONTINUAL SELF-RENEWAL KEEP PACE WITH THE WORLD

Professional manufacturer of mechatronics products

Address: No. 9, 6th Yunxi Road, Miyun Economic Development Zone, Beijing (101500)
Tel: 010-69076533
Fax: 010-69076577
http://www.ctb.com.cn
24 h national toll-free service line: 400-888-9055

WeChat

Tiktok

Due to constant technological improvements, texts, drawings and technical data in the manual may be changed without prior notice.